WARNING :

- All the pneumatic tools should only be used as hand operated tools. They are powered by compressed air and are not insulated against electric shock.
- Always turn off the air supply and disconnect the air hose before changing or replacing any inserted tool and accessory.
- Before using these tools, make sure that all couplings and plugs are securely fastened. Air hoses which are under pressure may lash out when disconnecting, that can lead to serious injury!
- High sound levels may cause hearing damage.
- Always wear hearing protection when operating this tool.
- Wearing eye/face protection can reduce the danger of high-speed materials being emitted from the tool.
- Make sure that the direction of the spark generated from the cutting wheel grinding wheel or shank stone is properly directed so as to not create a hazard..

- Always wear gloves to reduce risk
- User must wear proper clothing.
- Loose clothing, long hair, stings, straps, belts and jewelry should not be worn when operating this tool.
- Long periods of protong use will cause fatigue.
- Periodic breaks are recommended for user safety.
- It is recommended to stop operating the tool whenever discomfort, tingling or pain occurs during use.
- Make sure there is no gas or combustible material stored near the tool when servicing, changing insert tools, or storage.
- Wearing proper breathing protection to avoid inhale dust or handling debris from working process, which can be harmful to the health.

AUTHENTIC POWER

m7'S SUCCESS IS A TEAM EFFORT!

m7 as it is affectionately called by thousands of users worldwide, is much more than just a good manufacturer of air tools. In fact, m7 provides a total brand solution for its air tool partners and consumers. m7's team is composed of a strong network of International air tool experts and an enthusiastic team of engineers, designers, marketeers and administration personnel.

A STRONG BRAND LISTENS TO ITS CUSTOMERS

When we develop products such as our new, extremely small and handy air impact wrench NC-4610, m7 customers are our main driving force and focus. By building trust and excellent communication channels with our partners, distributors and channel customers, we very quickly get to understand what it is that they are looking for and what motivates their choice of air tools.

As a designer, manufacturer and distributor of tools, we are just as committed to bringing the most reliable, efficient, ergonomic tools to the market as we are to fulfill our promise of excellent service and support our clients.

EXPERTISE FOR A GLOBAL MARKET

m7 clients are very demanding and nothing short of excellence in product quality and fully committed support will do for them. We may sometimes feel that it is a lot to ask of a relatively new brand, but we embrace the challenge with open arms. We have been manufacturing tools for decades and our expertise in that field helps us better understand our clients' needs.

In terms of quality, we ensure that all the m7-branded products that we sell reflect our commitment to providing tools that are extremely reliable and perform. In order to achieve our standards of quality, our tools are tested thoroughly in our factory, using equipment such as computerized fatigue testing machines, digital torque testing machines, multi-functional testing machines, grinding efficiency testers, run-out testers, digital measuring projectors, environmental testing chamber, grinding and polishing machines, infrared tachometers, vibrations testers and decibel level detectors.

LEVEL IDENTIFICATION

LEVEL

The air tools in this section have been categorized into three distinctive levels for user convenience (for reference only).

★★★

Efficiency / Performance

Easy to use to handle tasks quickly,these tool embody efficiency and performance.

★★★★

Strength

Tools provide high torque force, superior grinding power and high cutting energy.

★★★★★

Endurance

Built to last, product longevity and low failure rate are characteristics associated with these tools.

APPLICATION

Application icons have been designed to provide visual references that suggest industry specific features or usability. These application icons are for reference only.

Automotive

Industry

Boat

Motorcycle

Agriculture

PNEUMATIC & CORDLESS TOOLS
GLOBAL EXPANSION

CONTENT

12 - NEW PRODUCT
24 - INDUSTRIAL GRADE
34 - AIR IMPACT WRENCH
60 - AIR RATCHET WRENCH
68 - AIR DIE GRINDER
76 - AIR ANGLE GRINDER
88 - AIR SANDER / AIR SQUARE SANDER
98 - AIR GEAR DRIVEN SANDER
100 - AIR PISTOL POLISHER SANDER
101 - AIR CUTTING TOOLS
110 - AIR DRILL
118 - AIR SCREWDRIVER
127 - SPRING BALANCER
129 - AIR HAMMER
134 - AIR HYDRAULIC RIVETER
139 - RIVETER ADAPTOR / RIVET NUT ADAPTOR
141 - AIR NAILER / AIR STAPLER
144 - AIR COIL NALLER
145 - AIR GREASE GUN
148 - AUTO REPAIR TOOL
159 - EXTRACTOR
160 - SANDBLASTING GUN
162 - FILTER REGULATOR LUBRICATOR
170 - AIR HOSE REEL
172 - WORKING CHAIR
174 - TORQUE WRENCH
179 - IMPACT SOCKET
206 - DISPLAY STAND / DISPLAY CASE
207 - ACCESSORIES
220 - AIR ADAPTOR / QUICK COUPLINGS
222 - POWER BIT
224 - MERCHANDISE
226 - CATALOGING INFORMATION
231 - ALPHABETIC INDEX
234 - CORDLLESS TOOLS

AUTHENTIC POWER

GLOBAL EXPANSION

PNEUMATIC & CORDLESS TOOLS

GLOBAL EXPANSION

AUTHENTIC POWER

Although we have been in the industry for more than 2 decades, m7 has only existed as a brand for a few short years. Nevertheless, the inroads that we have made in many important markets, such as automotive, have led us to believe that our combination of great partner support and quality air tools is our key to succeeding.

m7 has made its bed and the focus is clearly on providing the right combination of marketing support, customer training and new product development as the way forward. When we print our slogan "greater partner support" we see it not so much as wishful thinking, but more as a m7 "truth", a code by which we live daily.

GLOBAL EXPANSION
PNEUMATIC TOOLS
MIGHTY SEVEN

IN-PROCESS INSPECTION

What do we check during an In-Process Inspection?

The In-Process Inspection (IPI) cover our whole production process including the raw materials, unfinished products and assembly. Our team of inspectors chooses a specific quantity of completed products, according to AQL tables (MIL STD 105E).

We inspect product appearance, workmanship quality, size measurements, weight check, functionality assortment, accessories, labeling & logos, packaging, packing and other tests and special requirements, depending on the product.

NEW PRODUCTS

NC-4600

3/8" & 1/2" DRIVE AIR IMPACT WRENCH

Air inlet : 1/4"
Jumbo Hammer Type

10 pieces in one carton

- NC-4600 can equipped with 3/8" & 1/2" anvl

NC-4600-14Kit

3/8" & 1/2" DRIVE AIR IMPACT WRENCH

Air inlet : 1/4"
Jumbo Hammer Type

6 pieces in one carton

- NC-4600 can equipped with 3/8" & 1/2" anvil

Contents :

+1 pc Air Impact Wrench
+2 pc Square Head Drive : 3/8" & 1/2"
+1 pc Lubricating Oil
+1 pc Release Pin
+4 pc Impact Socket : 13-17-19-21 mm
+1 pc Impact Extension Bar : 14mm
+2 pc Bit Holder : 8 mm & 10 mm
+1 pc 12 mm Hex Bit
+1 pc T60 Torx

	Square Drive Inch	Bolt Capacity Inch (mm)	Torque Range FT-LB (Nm)	Max Torque FT-LB	Max Torque Nm	Free Speed R.P.M	Avg. Air Consumption CFM (L/min)	Air Pressure PSI (bar)	Overall Length Inch (mm)	Net Weight LBS	Net Weight kg	Air Hose Inch	Sound Pressure dBA	Vibration Level m/s²
NC-4600	1/2"	5/8"(16)	180-500(244-678)	600	813	9000	4.2(119)	90(6.3)	4"(99)	2.97	1.35	3/8"	96	3.7

NC-8266S
NC-8266S-6
NC-8266S-8

1" DRIVE AIR IMPACT WRENCH

Air inlet : 1/2"
Twin Hammer Type

2 pieces in one carton

- NC-8266S-6 is equipped with 6" extended anvil
- NC-8266S-8 is equipped with 8" extended anvil
- The front housing made by magnesium alloy
- Durability composite material

6.0 KG
3118 Nm

	Square Drive Inch	Bolt Capacity Inch (mm)	Torque Range FT-LB (Nm)	Max Torque FT-LB	Max Torque Nm	Free Speed R.P.M	Avg. Air Consumption CFM (L/min)	Air Pressure PSI (bar)	Overall Length Inch (mm)	Net Weight LBS	Net Weight kg	Air Hose Inch	Sound Pressure dBA	Vibration Level m/s²
NC-8266S	1"	1-3/8"(35)	200-1800(272-2448)	2300	3118	4500	7.5(212)	90(6.3)	16-7/8"(430)	13.2	6.0	1/2"	92	6.1
NC-8266S-6	1"	1-3/8"(35)	200-1800(272-2448)	2300	3118	4500	7.5(212)	90(6.3)	22-3/4"(580)	15.84	7.3	1/2"	92	6.1
NC-8266S-8	1"	1-3/8"(35)	200-1800(272-2448)	2300	3118	4500	7.5(212)	90(6.3)	24-3/4"(630)	16.28	7.4	1/2"	92	6.1

NC-6256Q

3/4" DRIVE AIR IMPACT WRENCH

Air inlet : 1/4"
Twin Hammer Type

6 pieces in one carton

1627 N.m
3/4" Anvil Impact Wrench

SUPER MINI

Exhaust

NC-6201

3/4" DRIVE AIR IMPACT WRENCH

Air inlet : 3/8"
Twin Hammer Type

6 pieces in one carton

Exhaust

	Square Drive Inch	Bolt Capacity Inch (mm)	Torque Range FT-LB (Nm)	Max Torque FT-LB	Max Torque Nm	Free Speed R.P.M	Avg. Air Consumption CFM (L/min)	Air Pressure PSI (bar)	Overall Length Inch (mm)	Net Weight LBS	Net Weight kg	Air Hose Inch	Sound Pressure dBA	Vibration Level m/s²
NC-6256Q	3/4"	7/8"(23)	150-900(203-1220)	1200	1627	7000	5.1(144)	90(6.3)	5-11/16"(145)	4.18	1.9	3/8"	85	2.8
NC-6201	3/4"	1-3/16"(30)	200-1200(271-1627)	1450	1966	5700	6.4(181)	90(6.3)	8-3/4"(222)	8.14	3.7	1/2"	88	5.9

QA-1211 / QA-1221
QA-2211 / QA-2221

AIR DIE GRINDER Safety Lever Type Throttle

Air inlet : 1/4"

20 pieces in one carton

- 3mm & 6mm clip collet type
- composite housing / light weight & comfort
- Low dBA also Low Vibration

Industrial Grade collet for precise concentricity

Exhaust

QA-1211 / QA-1221

Exhaust

QA-2211 / QA-2221

	Collet Size A mm	Collet Size B inch	Free Speed R.P.M	Avg. Air Consumption CFM (L/min)	Air Pressure PSI (bar)	Overall Length Inch (mm)	Motor HP	Net Weight LBS(kg)	Net Weight kg	Air Hose Inch	Sound Pressure dBA	Vibration Level m/s²
QA-1211	3	1/8"	25000	14	90 (6.3)	7-11/16"(196)	0.4	1.1	0.49	3/8"	68	0.9
QA-1221	6	1/4"	25000	14	90 (6.3)	7-11/16"(196)	0.4	1.1	0.49	3/8"	68	0.9
QA-2211	3	1/8"	20000	14	90 (6.3)	8-7/16"(215)	0.6	1.6	0.71	3/8"	75	0.9
QA-2221	6	1/4"	20000	14	90 (6.3)	8-7/16"(215)	0.6	1.6	0.71	3/8"	75	0.9

NEW PRODUCTS

QA-6205 A / B

Air inlet : 1/4"

Extended 90° Air Angle Die Grinder

Safety Lever Type Throttle

10 pieces in one carton

- 6mm collet type
- 360 degree swivel exhaust design
- Extended 6" 90-degree grinder head

	Collet Size inch / mm	Free Speed R.P.M	Avg. Air Consumption CFM (L/min)	Air Pressure PSI (bar)	Overall Length Inch (mm)	Motor HP	Net Weight LBS(kg)		Air Hose Inch	Sound Pressure dBA	Vibration Level m/s²
QA-6205A	6	14500	3.5	90 (6.3)	12-1/8"(308)	0.5	2.09	0.95	3/8"	---	---
QA-6205B	1/4"	14500	3.5	90 (6.3)	12-1/8"(308)	0.5	2.09	0.95	3/8"	---	---

QB-192L Safety Lever Type Throttle
QB-192 Roll Type Throttle

Air inlet : 1/4"

AIR ANGLE GRINDER

10 pieces in one carton

Note : The grinding wheel is not supplied along with the tool

QB-193L Safety Lever Type Throttle
QB-193 Roll Type Throttle

Air inlet : 1/4"

AIR ANGLE GRINDER

10 pieces in one carton

Note : The grinding wheel is not supplied along with the tool

	Pad Dia / Arbor Size inch(mm)	Spindle Size	Free Speed R.P.M	Avg. Air Consumption CFM (L/min)	Air Pressure PSI (bar)	Overall Length Inch (mm)	Motor HP	Net Weight LBS(kg)		Air Hose Inch	Sound Pressure dBA	Vibration Level m/s²
QB-192	2"(50)	1/4"-28	15000	5.3(150)	90 (6.3)	6-1/8"(154)	0.36	1.3	0.6	3/8"	81	2
QB-193	3"(75)	M8	13500	5.8(164)	90 (6.3)	7-1/8"(180)	0.44	2.4	1.1	3/8"	85	2.5

QB-20203

Air inlet : 1/4"

AIR RANDOM ORBITAL SANDER SELF-VACUUM

10 pieces in one carton

Note : 2" Sanding Pad & 3" Sanding Pad is supplied along with the tool

	Pad Dia inch(mm)	Free Speed R.P.M	Avg. Air Consumption CFM (L/min)	Air Pressure PSI (bar)	Overall Length Inch (mm)	Motor HP	Net Weight LBS(kg)		Air Hose Inch	Sound Pressure dBA	Vibration Level m/s²	orbit mm
QB-20203	2" + 3"	14000	3.0	90 (6.3)	5-1/8" (130)	-----	1.1	0.5	3/8"	81.6	1.5	3

QB-7315 M / S

2.3hp Air Angle Grinder / Lever Type Throttle

6 pieces in one carton

Note : The grinding wheel is not supplied along with the tool

Air inlet : 1/4"

FEATURES

- 2.3 HP governed motor provides constant speed and unstoppable stall-less operation.
- Superior torque for maximal productivity.
- Ergonomically designed composite grip, vibration damped, side handle and throttle trigger provide unmatched comfort to the user.

	Pad Dia inch / mm	Spindle Size	Free Speed R.P.M	Avg. Air Consumption CFM (L/min)	Air Pressure PSI (bar)	Overall Length Inch (mm)	Motor HP	Net Weight LBS(kg)		Air Hose Inch	Sound Pressure dBA	Vibration Level m/s²
QB-7315M	5"	M14*P2.0	10000	6.9(195)	90(6.3)	9-1/4"(234)	2.3	4.0	1.8	1/2"	88	3.8
QB-7315S	127	5/8"-11	10000	6.9(195)	90(6.3)	9-1/4"(234)	2.3	4.0	1.8	1/2"	88	3.8

QC-333

Air inlet : 1/4"

FLEX-HEAD AIR CUT-OFF TOOL

3" wheel

3 Angle Adjustable

Note:wheel is supplied with the tool

10 pieces in one carton

- 0.9 hp high power motor
- Excellent for cutting rusted bolts, nuts, motor exhaust clamps or hangers, sheet metal, fiberglass etc.

	inch(mm)	Free Speed R.P.M	Avg. Air Consumption CFM (L/min)	Air Pressure PSI (bar)	Overall Length Inch (mm)	Motor HP	Net Weight LBS	kg	Air Hose Inch	Sound Pressure dBA	Vibration Level m/s²
QC-333	3"(76.2)	20000	3.6(102)	90(6.3)	9-1/16"(230)	-----	2.42	1.1	3/8"	-----	-----

NEW PRODUCTS

NEW PRODUCTS

QD-501

GEAR DRIVEN AIR SAW (3 in 1)

Air inlet : 1/4"

GEAR DRIVING

File

Sawzall Blade

Air Saw

Note : The package contains a file and sawzall blande and air saw.

10 pieces in one carton

- Chuck can mount with Air Saw / Sawzall Blades / Files
- Transmission structure not easily stopped by external force
- Soft rubber hand grip

	Strokes Length (mm)	Strokes Per min. (S.P.M)	Avg. Air Consumption (CFM (L/min))	Air Pressure (PSI (bar))	Overall Length (Inch (mm))	Net Weight (LBS)	Net Weight (kg)	Air Hose (Inch)	Sound Pressure (dBA)	Vibration Level (m/s²)
QD-501	10	7000	4.5(127)	90(6.3)	11-5/8"(296)	2.6	1.2	3/8"	78	4.5

QD-260

AIR MINI SAW / FILE

Air inlet : 1/4"

2 pieces in one carton

File Collet Size Ø6.0mm

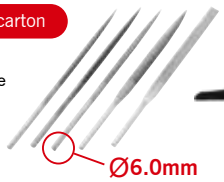

Ø6.0mm

x2

x1

Note : The package contains a flat file and two saw blades

- 360° swivel air-inlet can precisely control the cutting direction.
- Adjustable blade guard for controlling cutting depth/precisely cutting complex shapes and straight lines.
- Gear type transmission can provide greater torque than traditional piston type structure.
- Suitable for body, muffler and exhaust device, and sunroof installation.

	Strokes Length (mm)	Strokes Per min. (S.P.M)	Collef Size (mm)	Avg. Air Consumption (CFM (L/min))	Air Pressure (PSI (bar))	Overall Length (Inch (mm))	Net Weight (LBS)	Net Weight (kg)	Air Hose (Inch)	Sound Pressure (dBA)	Vibration Level (m/s²)
QD-260	8	7000	-----	4.5 (127.4)	90 (6.3)	6-11/16" (170)	1	0.5	3/8"	-----	-----

QE-3031

3/8" AIR REVERSIBLE DRILL

With Key Chuck

Air inlet : 1/4"

- Max Tapping Capacity M6
- Max Drill Capacity ϕ 10
- Aluminum die-casting body provide durably life-time

10 pieces in one carton

Forward & Reverse Switch

	Chuck Size (inch(mm))	Free Speed (R.P.M)	Motor (hp)	Avg. Air Consumption (CFM (L/min))	Air Pressure (PSI (bar))	Overall Length (Inch (mm))	Net Weight (LBS)	Net Weight (kg)	Air Hose (Inch)	Sound Pressure (dBA)	Vibration Level (m/s²)
QE-3031	3/8"	1800	0.5	4(113)	90(6.3)	8-1/2" (215)	3.2	1.5	3/8"	87	2.0

QK-131

Air Oscillating Tool With Universal Adapter

Note:Blade is not supplied along with the tool

Air inlet : 1/4"

10 pieces in one carton

FEATURES

- With Patent Flange, suitable most air Knife/Multi-Cutter Blade
- Extremely light weight, only 0.67 kg
- Low consumption, only 1.9 CFM (General 5 CFM)
- Only 1/3 size to most of oscillating tool on the market
- 360° adjustable exhaust cover
- Rubber sleeve provide absolute comfort feel and also reducing vibration

Patented flange can share pneumatic scraper & electric grinder blade.

	Oscillation per min	Avg. Air Consumption CFM (L/min)	Overall Length Inch (mm)	Net Weight LBS(kg)	Air Hose Inch	Sound Pressure dBA	Vibration Level m/s²
QK-131	20000	1.9(121)	7-1/8"(176)	1.5(0.6)	3/8"	78	4.5

PB-2601

Air Hydraulic Nut Setter

Air inlet : 1/4"

- Automatic mechanism to quickly push up and pull back rivet.
- 6 size spindle 3mm / 4mm / 5mm / 8mm / 10mm / 12mm
- The thickness of the pull nut can be adjusted quickly.

	Max Power lb.-f(kg.-f)	Free Speed R.P.M	Stroke Length mm	Capacity mm	Air Pressure PSI (bar)	Avg. Air Consumption CFM	Net Weight LBS	Net Weight kg	Air Hose Inch	Sound Pressure dBA	Vibration Level m/s²
PB-2601	4300(594.5)	3500	0-7.0	M3 - M12	90 (6.3)	7.5	5.4	2.46	3/8"	80	1.2

SM-111R

AIR DENT PULLER

Air inlet : 1/4"

4 pieces in one carton

- Large area and slight depression of the sheet metal can be quickly repaired.
- Three sizes of suction cups can be used in different areas of depression.
- Simple structure and long product life.

	Pad Dia Inch(mm)	Exhaust Syetem	Maximum Pulling Force Kg	Air Pressure PSI (bar)	Avg. Air Consumption CFM (L/min)	Net Weight LBS	Net Weight kg	Slide Hammer Weight LBS	Slide Hammer Weight kg	Overall Length Inch (mm)
SM-111R	3",4.5",6"(78,115,155)	Rear	90-100	90 (6.3)	8.5(240)	6.0	2.75	3.5	1.6	44-1/8"(1120)

NEW PRODUCTS

NEW PRODUCTS

NE-3305 / NE-4305

3/8" & 1/2" DRIVE AIR RATCHET WRENCH Air inlet : 1/4"

10 pieces in one carton

- Strengthen frame above the ratchet head for heavy duty durability
- Twin-Gear mechanism for better lifetime
- Long handle design reach narrow and limited spaces

NE-4815

1/2" DRIVE AIR RATCHET WRENCH Air inlet : 1/4"

10 pieces in one carton

- 0.9 HP high performance motor
- 3 pcs planet gear enhanced durability and stability
- Handle design with improved grip
- 360 degree swivel exhaust

QK-112 Contains Blade
QK-112N

Air Scraper Kit

Air inlet : 1/4"

- Removes gaskets, paint, rust and other materials
- Removes undercoating, seam sealers, etc.
- Built-in regulator

Blades included:

1. 1.77" Wide Blade
2. 1.75" L-Shaped Blade
3. 1" Wide 45° Blade
4. 1" Wide Blade

QK-112

QK-112N

	Strokes Length mm	Strokes Per min. S.P.M	Avg. Air Consumption CFM (L/min)	Air Pressure PSI (bar)	Overall Length Inch (mm)	Net Weight LBS	Net Weight kg	Air Hose Inch	Sound Pressure dBA	Vibration Level m/s²
QK-112	16	4200	3.0 (84.9)	90(6.3)	7-23/32"(196)	1.52	0.69	3/8"	93.0	9.0

	Square Drive Inch	Torque Range FT-LB (Nm)	Max Torque FT-LB	Max Torque Nm	Free Speed R.P.M	Avg. Air Consumption CFM (L/min)	Air Pressure PSI (bar)	Overall Length Inch (mm)	Net Weight LBS	Net Weight kg	Air Hose Inch	Sound Pressure dBA	Vibration Level m/s²
NE-4815	1/2"	40-120 (54-163)	150	204	170	4.8(136)	90 (6.3)	12-1/4"(313)	3.39	1.54	3/8"	93	2.5
NE-3305	3/8"	15-55 (20-75)	1/2"	1/2"	160	5(142)	90 (6.3)	15-3/8"(390)	3.52	1.6	3/8"	82	1.2
NE-4305	1/2"	15-55 (20-75)	1/2"	1/2"	160	5(142)	90 (6.3)	15-3/8"(390)	3.52	1.6	3/8"	82	1.2

SX-4101

SODA BLASTER
Air Inlet : 1/4"

10 pieces in one carton

Environmentally Friendly Air Tool

	Cup Capacity L	Avg. Air Consumption CFM (L/min)	Air Pressure PSI (bar)	Overall Length Inch (mm)	Net Weight LBS(kg)		Air Hose Inch	Sound Pressure dBA
SX-4101	0.6	8.0 (226.5)	90 (6.3)	7-3/4" (197)	0.8	0.36	3/8"	82

SB-710

TYRE INFLATOR
Tyre Valve Clip

Air Inlet : 1/4"
1M Piping

Large Dial Face

12 pieces in one carton

FEATURES

- Measuring range: 0~230psi, 0~16bar.
- Two-stage trigger (inflating & deflating), clip-on connector.
- Large dial face and easy to read psi, bar.

	Max Pressure PSI (bar)	Air Consumption at 100PSI CFM	Air Inlet Iinch	Air Pressure PSI (bar)	Net Weight lb	Net Weight kg	Air Hose Inch	Nozzle Length cm
SB-710	200	1.41	1/4"	90 (6.3)	1	0.5	3/8"	100

QC-512

MINI AIR CHAMFERING TOOLS
Air Inlet : 1/4"

Extreme small size and light weight air tool.
Also have variable chamfering speed function

10 pieces in one carton

MIGHTY COMPACT

FEATURES

- Triangle type Indexable Inserts
- Variable chamfering speed
- Extremely small size chamfering air tool

	Chamfering Capacity	Free Speed R.P.M	Overall Length inch(mm)	Air Pressure PSI (bar)	Avg. Air Consumption CFM	Net Weight LBS	Net Weight kg	Air Hose Inch	Sound Pressure dBA
QC-512	C0.1 - C2.0	28000	4-1/7"(105)	90 (6.3)	2	1.1	0.5	3/8"	85

NEW PRODUCTS

NEW PRODUCTS

SP-3900
SP-31050
SP-31200

SPRING BALANCER

1 pieces in one carton

- Spiral design.
- Increasing screw diameter is balanced by increasing spring force so that the output force is balanced and the tool stops at wherever it is pulled.

SP-3900/31050/31200
unit:mm

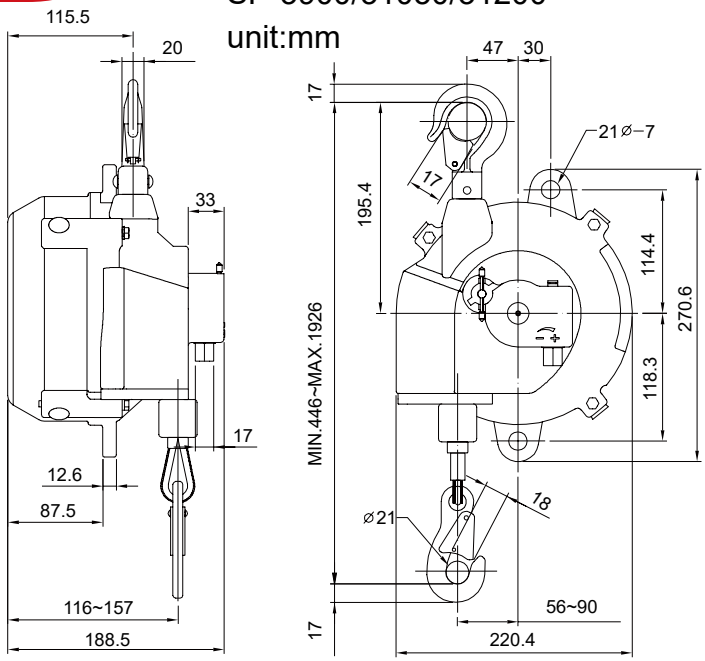

	Capacity Kg	Travel m	Rope	Rope Dia mm	Weight kg
	kg	L		⌀	kg
SP-3900	70~90	2	Cable	4.8	22.2
SP-31050	90~105	2	Cable	4.8	23.8
SP-31200	105~120	2	Cable	4.8	27.4

★★
★★

TE-81N / TE-82N
TE-83N / TE-84N / TE-85N

1" Torque Wrench,Engrave. Nm / ft-lb scale

- Products conform to international standards - DIN 6789 / ASME B107
- Reversible torque wrench for bi-directional tightening
- Torque Spring made by alloy steel, provide stability and durability
- Customized torque scale available

	Drive inch	Torque Range (Nm)	Torque Range (ft-lb)	Indicator	Torque Adjusting	D mm	H mm	L mm	Weight kg
TE-815080N	1"	150~800	129~572	Engraved	Rotating	---	---	1240	6.1
TE-820100N	1"	200~1000	166~719	Engraved	Rotating	70.2	72.1	1240	6.4
TE-830150N	1"	300~1500	258~1070	Engraved	Rotating	---	---	1850	10.6
TE-840200N	1"	400~2000	369~1402	Engraved	Rotating	---	---	2300	18.3
TE-850250N	1"	500~2500	443~1771	Engraved	Rotating	74.5	66.1	2755	19.6

TM-0416
TM-0418

TORQUE MULTIPLIER

- Works with high transmission efficiency by planet gears
- 5:1 torque multiplication
- Multiplication accuracy ±5%
- Supplied with 2 reaction bar styles

TM-0428-1
TM-0428-2

TORQUE MULTIPLIER

- Multiplication deviation less than ±5%
- Mechanism with high ratio gearbox 26:1
- High ratios offer benefits without using long lever arms or heavy wrenches
- Supplied with 2 different reaction bar
- Durable construction without maintenance necessary and long lifetime

	Input Square	Output Square	Max Rated Output	Ratio	Net Weight	
	Inch	Inch	FT-LB(Nm)		LBS	kg
TM-0416	1/2"	3/4"	1100(1500)	5 : 1	14.2	6.48
TM-0418	1/2"	1"	1100(1500)	5 : 1	14.2	6.48
TM-0428-1	1/2"	1"	2200(3000)	15.5 : 1	25.4	11.5
TM-0428-2	1/2"	1"	3300(4500)	26 : 1	28.7	13

SR-2001-KIT

AIR BRUSH KIT

40 pieces in one carton

CONTENTS

+1 Airbrush
+1 22c.c. Glass Jar
+1 50c.c. Glass Jar
+1 55FT(M5*0.45) Air Hose
+1 Adaptor
+1 Holder
+1 2c.c. Cup
+1 8c.c. Cup
+1 Spanner

FEATURES

- Double-Action Trigger can control the amount of paint.
- Included Airbrush Holder can be placed when idle.
- The air volume can be adjusted through the adjustment button.
- Light-Weight and Ergonomic body can be easily operated with one hand.
- 0.3mm Ultra-Fine Nozzle can easily handle details.

SZ-212A

AIR REGULATOR

FEATURES

- Used to adjust the air inlet flow of pneumatic tools
- Easy to mount

NEW PRODUCTS

NEW PRODUCTS

SE-2011
LED WORKLIGHT

Key Spec:
LED : 3W COB with 1W LED
Lumen : 250~300 lm
Lithium Rechargeable Battery : 3.7V 1800m AH
Charger Input : DC 5V Micro USB
Recharger Time : 3 ~ 4 hours
Discharging Time : 2 . 5 ~ 3 hours
Operation Temperature : - 5 °C to 50 °C

10 pieces in one carton

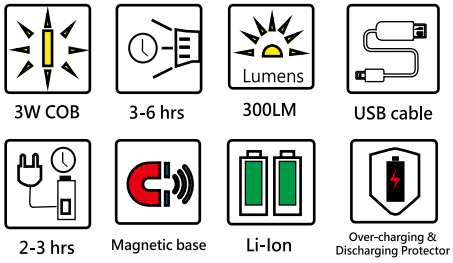

FEATURES

- LED work light with lithium rechargeable battery.
- Lighting part using 3 watts COB LED, provide longer life time.
- Magnetic Base can attach on any sheet metal parts.
- SE-2011 also has Over-charging & Discharging Protector.

AD-3511P
Display security steel wire rope

AD-3511T
Hook type base

Hook type base with card display
& display security steel wire rope

Contents :

AD-3511P :
1 x Display security steel wire rope
2x L Hex wrench
1x Hex socket screws

AD-3511T :
1x Acrylic Card Case hook type base

Item No.	Adaptor Type	Contents
AD-3511	Europe	
AD-3512	Japan	
AD-3513	U.S.A	

MB64008M1
8PCS 3/4" Drive Impact Socket Set

6 pieces in one carton

Contents : 21mm , 23mm , 24mm , 27mm , 30mm , 32mm , 36mm , 41mm

MB66006S
MB66006M
6PCS 3/4" Impact Hex Driver SET (100mm Length)

5 pieces in one carton

Contents :
S : 1/2", 9/16" , 5/8" , 3/4" , 7/8" , 1" **M :** H12 , H14 , H17 , H19 , H22 , H24

MA4550M50

5PCS 1/2" Driver Twist Socket SET (50mm Length)

20 pieces in one carton

Contents :
17mm,19mm,21mm,22mm

- Punch Bar ⌀12-80L

TWIST

SG-405

SG-400 + SG-902 400 ml

SG-407

SG-401 + SG-902 400 ml
Continuous Type

Air Grease Gun

10 pieces in one carton

Key Spec:
Single shot type
Air inlet : 1/4"
19.6mm & 33.6mm Thread Adapter Included

FEATURES

- The body is equipped with two sizes of adapters, which can use 19.6mm thread and 33.6mm thread head Grease Tube.

SG-902

Grease Tube Adapter

MOQ. 50 pieces

FEATURES

- SG-902 is a double size adapter that can be combined.
- This 2-in-1 adapter can be used with most grease guns that require a grease tube.
- This adapter can be connected to oil tanks with 19.6mm thread and 33.6mm thread head Grease Tube.

ST-14B7-T

7-Drawer Roll-Wagon

1 pieces in one carton

FEATURES

- Four corner aluminum alloy metal trim mounted.
- Soft cart handle.
- High-density EVA cushion on the table top.
- With drawer lock.
- 360° caster with wheel lock.
- Four 5" x 2" casters with brake.

	LENGTH (MM)	WIDTH (MM)	HEIGHT (MM)
CABINET	770	460	960
DRAWER	576 576	380 380	75 154

INDUSTRIAL GRADE

AIR IMPACT WRENCH

NC-3831

3/8" DRIVE AIR IMPACT WRENCH

Twin Dog Type
Air inlet : 1/4"

10 pieces in one carton

NC-3812

3/8" DRIVE AIR IMPACT WRENCH

Twin Dog Type
Air inlet : 1/4"

10 pieces in one carton

NC-4811

1/2" DRIVE AIR IMPACT WRENCH

Twin Dog Type
Air inlet : 1/4"

10 pieces in one carton

NC-3910

3/8" DRIVE AIR IMPACT WRENCH

Twin Dog Type
Air inlet : 1/4"

10 pieces in one carton

NC-3911

3/8" DRIVE AIR IMPACT WRENCH

Twin Dog Type
Air inlet : 1/4"

10 pieces in one carton

	Square Drive Inch	Bolt Capacity Inch (mm)	Torque Range FT-LB (Nm)	Max Torque FT-LB	Max Torque Nm	Free Speed R.P.M	Avg. Air Consumption CFM (L/min)	Air Pressure PSI (bar)	Overall Length Inch (mm)	Net Weight LBS	Net Weight kg	Air Hose Inch	Sound Pressure dBA	Vibration Level m/s²
NC-3831	3/8"	M12	80-120(108-162)	180	244	8000	10(283)	90 (6.3)	7-9/32" (185)	2.9	1.34	3/8"	93.0	4.9
NC-3812	3/8"	M10~M12	60-120(81-162)	180	244	8000	10(283)	90 (6.3)	7-31/64" (190)	2.3	1.06	3/8"	97.0	5.1
NC-4811	1/2"	9/16"(14)	118-140 (160-189)	210	285	5500	8.5(240)	90(6.3)	10-9/32" (260)	3.7	1.70	3/8"	85.0	5.3
NC-3910	3/8"	5/16"(8)	5-37(7-50)	66	89	8500	8.5(240)	90 (6.3)	10-7/16"(265)	3.5	1.60	3/8"	90.0	5.1
NC-3911	3/8"	3/8"(10)	5-44(7-60)	96	130	7000	7.0(198)	90 (6.3)	9-7/16"(240)	3.5	1.60	3/8"	92.0	5.1

AIR DIE GRINDER

QA-1710 A / B

EXTENDED AIR DIE GRINDER

Air inlet : 1/4"

FEATURES

- Grinder can be used in a wide range of grinding and polishing applications.
- Easy operation at the corner or deep place.

10 pieces in one carton

QA-141 A / B
QA-141L A / B

AIR DIE GRINDER

Air inlet : 1/4"

QA-141-Roll Type Throttle
QA-141L-Lever Type Throttle

- 6mm clip collet / overall type
- steel overall housing / high strength
- Front exhaust design

20 pieces in one carton

80% Longer Life-time

70% More Powerful

	Collet Size A mm	Collet Size B inch	Free Speed R.P.M	Avg. Air Consumption CFM (L/min)	Air Pressure PSI (bar)	Overall Length Inch (mm)	Motor HP	Net Weight LBS(kg)		Air Hose Inch	Sound Pressure dBA	Vibration Level m/s²
QA-1710	6	1/4"	18000	5.0(141)	90(6.3)	18-5/16"(465)	0.4	2.36	1.07	3/8"	80.0	1.5
QA-141	6	1/4"	24000	14.0(396)	90(6.3)	6-11/16"(170)	0.4	1.3	0.60	3/8"	75.0	2.5
QA-141L	6	1/4"	24000	14.0(396)	90(6.3)	6-11/16"(170)	0.4	1.3	0.60	3/8"	75.0	2.5

QA-131 A / B

AIR DIE GRINDER
Air inlet : 1/4"

Roll Type Throttle

20 pieces in one carton

QA-143 A / B

AIR DIE GRINDER
Air inlet : 1/4"

Roll Type Throttle

12 pieces in one carton

QA-151 A / B

AIR DIE GRINDER
Air inlet : 1/4"

Roll Type Throttle

20 pieces in one carton

QA-163 A / B
QA-163L A / B

AIR DIE GRINDER
Air inlet : 1/4"

QA-163-Roll Type Throttle
QA-163L-Lever Type Throttle

12 pieces in one carton

	Collet Size A mm	Collet Size B inch	Free Speed R.P.M	Avg. Air Consumption CFM (L/min)	Air Pressure PSI (bar)	Overall Length Inch (mm)	Motor HP	Net Weight LBS(kg)		Air Hose Inch	Sound Pressure dBA	Vibration Level m/s²
QA-131	3	1/8"	30000	14.0(396)	90(6.3)	6-11/16"(170)	0.4	1.3	0.60	3/8"	75.0	2.5
QA-143	6	1/4"	24000	14.0(396)	90(6.3)	11-11/16"(296)	0.4	2.0	0.90	3/8"	75.0	2.5
QA-151	6	1/4"	18000	12.2(345)	90(6.3)	7"(177)	0.9	1.76	0.80	3/8"	75.0	2.1
QA-163	6	1/4"	16000	5.0(141)	90(6.3)	12"(305)	0.9	2.7	1.25	3/8"	90.0	2.8
QA-163L	6	1/4"	16000	5.0(141)	90(6.3)	13-25/32"(350)	0.9	2.9	1.31	3/8"	90.0	2.8

INDUSTRIAL GRADE

AIR ANGLE GRINDER

QB-197Q

AIR ANGLE GRINDER / LEVER TYPE THROTTLE

Air inlet : 3/8"

6 pieces in one carton

Note : The grinding wheel is not supplied along with the tool

QB-194

AIR ANGLE GRINDER / ROLL TYPE THROTTLE

Air inlet : 3/8"

10 pieces in one carton

Note : The grinding wheel is not supplied along with the tool

QB-194L

AIR ANGLE GRINDER / LEVER TYPE THROTTLE

Air inlet : 3/8"

6 pieces in one carton

Note : The grinding wheel is not supplied along with the tool

QB-194-CN

AIR ANGLE GRINDER / ROLL TYPE THROTTLE

Air inlet : 3/8"

9 pieces in one carton

Note : The grinding wheel is not supplied along with the tool

QB-195-85
QB-195-120

AIR ANGLE GRINDER / ROLL TYPE THROTTLE

Air inlet : 3/8"

10 pieces in one carton

Note : The grinding wheel is not supplied along with the tool

QB-195L-85
QB-195L-120

AIR ANGLE GRINDER / LEVER TYPE THROTTLE
Air inlet : 3/8"

6 pieces in one carton

Note : The grinding wheel is not supplied along with the tool

QB-195-CN

AIR ANGLE GRINDER / ROLL TYPE THROTTLE
Air inlet : 3/8"

9 pieces in one carton

Note : The grinding wheel is not supplied along with the tool

QB-199 S/M

AIR ANGLE GRINDER / LEVER TYPE THROTTLE
Air inlet : 3/8"

4 pieces in one carton

Note : The grinding wheel is not supplied along with the tool

	Pad Dia / Arbor Size inch(mm)	Spindle Size	Free Speed R.P.M	Avg. Air Consumption CFM (L/min)	Air Pressure PSI (bar)	Overall Length Inch (mm)	Motor HP	Net Weight LBS(kg)		Air Hose Inch	Sound Pressure dBA	Vibration Level m/s²
QB-197Q	7"(178x22)	5/8"-11	7000	6.0(170)	90(6.3)	13-15/16"(353)	2.2	6.8	3.1	3/8"	77.0	2.4
QB-194	4"(100x16)	M8 X 1.25	12000	4.9(138)	90(6.3)	8-15/32"(215)	0.9	4.2	1.9	3/8"	91.0	2.6
QB-194L	4"(100x16)	M8 X 1.25	12000	4.9(138)	90(6.3)	10-23/32"(272)	0.9	4.6	2.1	3/8"	89.0	2.5
QB-194-CN	4"(100x16)	M8 X 1.25	13500	4.8(136)	90(6.3)	8-15/64"(210)	0.8	4.2	1.9	3/8"	92.0	2.8
QB-195-85	5"(125x22)	1/2"-13	8500	4.9(138)	90(6.3)	8-15/16"(227)	1.4	5.3	2.4	3/8"	91.0	2.1
QB-195L-85	5"(125x22)	1/2"-13	8500	4.9(138)	90(6.3)	10-13/16"(275)	1.4	5.5	2.5	3/8"	91.0	2.1
QB-195L-120	5"(125x22)	1/2"-13	12000	5.1(144)	90(6.3)	10-13/16"(275)	1.4	5.5	2.5	3/8"	91.0	2.1
QB-195-120	5"(125x22)	1/2"-13	12000	5.1(144)	90(6.3)	8-15/16"(227)	1.4	5.3	2.4	3/8"	91.0	2.1
QB-195-CN	5"(125x22)	M8 X 1.25	12000	4.9(138)	90(6.3)	8-15/32"(215)	1.0	4.4	2.0	3/8"	91.0	2.6
QB-199S	9"(230x22)	5/8"	5900	6.8(178)	90(6.3)	14"(360)	2.5	9.9	4.5	3/8"	98.0	3.75
QB-199M	9"(230x22)	M14 X P2.0	5900	6.8(178)	90(6.3)	14"(360)	2.5	9.9	4.5	3/8"	98.0	3.75

AIR ANGLE GRINDER

QB-1004

AIR ANGLE GRINDER / ROLL TYPE THROTTLE

Air inlet : 1/4"

6 pieces in one carton

Note : The grinding wheel is not supplied along with the tool

QB-2925

AIR STRAIGHT GRINDER / ROLL TYPE THROTTLE

Air inlet : 3/8"

12 pieces in one carton

Note : The grinding wheel is not supplied along with the tool

QB-2925L

AIR STRAIGHT GRINDER / LEVER TYPE THROTTLE

Air inlet : 3/8"

12 pieces in one carton

Note : The grinding wheel is not supplied along with the tool

	Pad Dia / Arbor Size inch(mm)	Spindle Size	Free Speed R.P.M	Avg. Air Consumption CFM (L/min)	Air Pressure PSI (bar)	Overall Length Inch (mm)	Motor HP	Net Weight LBS(kg)		Air Hose Inch	Sound Pressure dBA	Vibration Level m/s²
QB-1004	4" (100x16)	M8 X 1.25	13500	4.9(138)	90(6.3)	7-3/32"(215)	0.6	2.6	1.22	3/8"	86.0	2.5
QB-2925	(65x13x9.5)	M10 X 1.5	16000	5.0(141)	90(6.3)	10-11/16"(270)	0.9	2.9	1.33	3/8"	90.0	2.8
QB-2925L	(65x13x9.5)	M10 X 1.5	16000	5.0(141)	90(6.3)	12-25/32"(324)	0.9	3.0	1.39	3/8"	90.0	2.8

Clutch Type Series

External Adjustment

RA-1131

AIR SCREWDRIVER ADJUSTABLE CLUTCH

Screw Capacity : M4
Air inlet : 1/4"

10 pieces in one carton

9.5mm

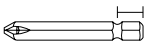

Exhaust

RA-1141

AIR SCREWDRIVER ADJUSTABLE CLUTCH

Screw Capacity : M4
Air inlet : 1/4"

10 pieces in one carton

9.5mm

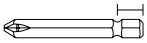

Exhaust

RA-1151

AIR SCREWDRIVER ADJUSTABLE CLUTCH

Screw Capacity : M5
Air inlet : 1/4"

10 pieces in one carton

9.5mm

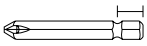

Exhaust

RA-2161

AIR SCREWDRIVER ADJUSTABLE CLUTCH

Screw Capacity : M5
Air inlet : 1/4"

10 pieces in one carton

9.5mm

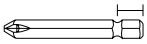

Exhaust

	Bit Size inch(mm)	Torque Range FT-LB(Nm)	Free Speed R.P.M	Avg. Air Consumption CFM (L/min)	Air Pressure PSI (bar)	Overall Length Inch (mm)	Net Weight LBS	Net Weight kg	Air Hose Inch	Sound Pressure dBA	Vibration Level m/s²
RA-1131	1/4"(6.35)	0.7~2.9(1-4)	1800	4.5(127)	90(6.3)	9"(228)	1.6	0.76	3/8"	80.0	2.3
RA-1141	1/4"(6.35)	0.7~2.2(1-3)	800	4.5(127)	90(6.3)	8-7/8"(226)	1.6	0.76	3/8"	80.0	2.3
RA-1151	1/4"(6.35)	1.4~3.7(2-5)	1900	4.5(127)	90(6.3)	9-1/32"(229)	2.2	1.01	3/8"	85.0	2.3
RA-2161	1/4"(6.35)	1.4~3.7(2-5)	750	7.5(212)	90(6.3)	7-15/32"(190)	2.0	1.00	3/8"	80.0	2.0

INDUSTRIAL GRADE

AIR SCREWDRIVER

Clutch Type Series

Internal Adjustment

- Clockwise direction to increase torque
- Counterclockwise direction to decrease torque

RA-1132

AIR AIR SCREWDRIVER ADJUSTABLE CLUTCH

Screw Capacity : M4
Air inlet : 1/4"

10 pieces in one carton

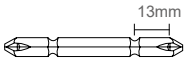

Exhaust

RA-1142

AIR SCREWDRIVER ADJUSTABLE CLUTCH

Screw Capacity : M4
Air inlet : 1/4"

10 pieces in one carton

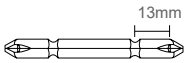

Exhaust

RA-1162

AIR SCREWDRIVER ADJUSTABLE CLUTCH

Screw Capacity : M6
Air inlet : 1/4"

10 pieces in one carton

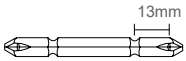

Exhaust

	Bit Size inch(mm)	Torque Range FT-LB(Nm)	Free Speed R.P.M	Avg. Air Consumption CFM (L/min)	Air Pressure PSI (bar)	Overall Length Inch (mm)	Net Weight LBS	Net Weight kg	Air Hose Inch	Sound Pressure dBA	Vibration Level m/s²
RA-1132	1/4"(6.35)	0.7~2.2(1-3)	2200	6.0(170)	90(6.3)	9-7/32"(235)	1.7	0.8	3/8"	80.0	2.3
RA-1142	1/4"(6.35)	0.7~2.2(1-3)	1700	5.0(141)	90(6.3)	9-7/32"(235)	1.34	0.61	3/8"	80.0	2.0
RA-1162	1/4"(6.35)	1.5~5.9(2-8)	600	6.0(170)	90(6.3)	10-7/16"(265)	2.1	0.95	3/8"	90.0	2.2

AIR SCREWDRIVER

Torque Control or Shut-off

RA-31/RA-41/RA-51 SERIES

SHUT-OFF SCREWDRIVER
Air inlet : 1/4"

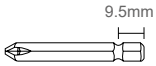

Exhaust

RA-30/RA-40/RA-50 SERIES

SHUT-OFF SCREWDRIVER
Air inlet : 1/4"

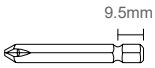

12 pieces in one carton

Exhaust

- Proved by the life-time tester, these items can be operated continuously up to 1.5 million times.
- Industrial grade, excellent for long continous operation on various mass production lines..
- Low noise and vibration rate, high adjustable accuracy up to + - 5%.

ZT-31

DIGITAL TORQUE TESTER
Torque Range 0~14.7Nm (0~150 Kgf.cm)

	Chuck Size inch(mm)	Torque Range IN-LB(N,m)	Free Speed R.P.M	Avg. Air Consumption CFM (L/min)	Air Pressure PSI (bar)	Overall Length Inch (mm)	Net Weight LBS	Net Weight kg	Air Hose Inch	Sound Pressure dBA	Vibration Level m/s²
RA-3011	1/4"(6.35)	9.7-18.6(1.1-2.1)	1100	3.2(90.6)	90(6.3)	7-3/8"(187)	0.94	0.42	1/4"	70.0	2.0
RA-3017	1/4"(6.35)	6.2-13.3(0.7-1.5)	1700	3.2(90.6)	90(6.3)	7-3/8"(187)	0.94	0.42	1/4"	70.0	2.0
RA-3023	1/4"(6.35)	3.5-8.8(0.4-1.0)	2300	3.2(90.6)	90(6.3)	7-3/8"(187)	0.94	0.42	1/4"	70.0	2.0
RA-4008	1/4"(6.35)	14.1-35.4(1.6-4.0)	800	3.7(104.8)	90(6.3)	8-1/4"(209)	1.43	0.65	1/4"	74.0	2.5
RA-4015	1/4"(6.35)	8.8-19.5(1.0-2.2)	1500	3.7(104.8)	90(6.3)	8-1/4"(209)	1.43	0.65	1/4"	74.0	2.5
RA-4021	1/4"(6.35)	8.8-15(1.0-1.7)	2100	3.7(104.8)	90(6.3)	8-1/4"(209)	1.43	0.65	1/4"	74.0	2.5
RA-5005	1/4"(6.35)	44.2-92.9(5.0-10.5)	480	4.0(113)	90(6.3)	9-1/2"(240)	2.2	1.0	3/8"	75.0	10
RA-5008	1/4"(6.35)	26.5-48.7(3.0-5.5)	800	4.0(113)	90(6.3)	9-1/2"(240)	2.2	1.0	3/8"	75.0	10
RA-5017	1/4"(6.35)	13.3-23.0(1.5-2.6)	1700	4.0(113)	90(6.3)	9-1/2"(240)	2.2	1.0	3/8"	75.0	10
RA-3111	7/64"(2.6)	9.7-18.5(1.1-2.1)	1100	7.0(198)	90(6.3)	6-11/16"(170)	1.57	0.71	1/4"	82.0	0.73
RA-3117	1/4"(6.35)	6.2-13.2(0.7-1.5)	1700	7.0(198)	90(6.3)	6-11/16"(170)	1.57	0.71	1/4"	84.0	1.51
RA-3123	1/4"(6.35)	3.5-8.8(0.4-1.0)	2300	7.0(198)	90(6.3)	6-11/16"(170)	1.57	0.71	1/4"	84.0	1.34
RA-4108	1/4"(6.35)	14.1-35.2(1.6-4.0)	800	10.5(297)	90(6.3)	6-15/16"(175)	1.92	0.87	1/4"	87.5	1.18
RA-4115	1/4"(6.35)	8.8-19.4(1.0-2.2)	1500	10.5(297)	90(6.3)	6-15/16"(175)	1.92	0.87	1/4"	85.5	1.59
RA-4121	1/4"(6.35)	8.8-13.2(1.0-1.7)	2100	10.5(297)	90(6.3)	6-15/16"(175)	1.92	0.87	1/4"	86.8	1.61
RA-5105	1/4"(6.35)	44-92.4(5.0-10.5)	480	17.5(496)	90(6.3)	7-4/5"(198)	2.65	1.20	1/4"	93.1	0.48
RA-5108	1/4"(6.35)	26.4-48.4(3.0-5.5)	800	17.5(496)	90(6.3)	7-4/5"(198)	2.65	1.20	1/4"	93.6	0.93
RA-5117	1/4"(6.35)	13.2-23(1.5-2.6)	1700	17.5(496)	90(6.3)	7-4/5"(198)	2.65	1.20	1/4"	93.6	1.35

AIR IMPACT WRENCH

TOP SALES

NC-4255Q
NC-4265Q

1/2" DRIVE AIR IMPACT WRENCH

Twin Hammer Type
Air inlet : 1/4"

NC-4265 is equipped with 2" extended anvil

8 pieces in one carton

PATENT GREASE HOLE

FOR EZ GREASE VERSION ONLY

Exhaust

NC-4255QP
NC-4255QHP

(EZ GREASE ANVIL)

WITH PROTECTIVE COVER INSIDE

8 pieces in one carton

FEATURES

- The front housing & back head cover made by magnesium alloy
- Durability composite material

PATENT GREASE HOLE

FOR EZ GREASE VERSION ONLY

Exhaust

NC-4255QH

EZ GREASE ANVIL

NC-4255PVC

PROTECTIVE COVER

"IMPOSSIBLE"
Is Not A Big Word Anymore

The world's lightest and most powerful

TORO

	Square Drive Inch	Bolt Capacity Inch (mm)	Torque Range FT-LB (Nm)	Max Torque FT-LB	Max Torque Nm	Free Speed R.P.M	Avg. Air Consumption CFM (L/min)	Air Pressure PSI (bar)	Overall Length Inch (mm)	Net Weight LBS	Net Weight kg	Air Hose Inch	Sound Pressure dBA	Vibration Level m/s²
NC-4255Q	1/2"	1"(25)	200-800(271-1085)	1200	1627	8500	4.8(136)	90(6.3)	7-1/32"(179)	3.7	1.70	3/8"	85.0	4.7
NC-4265Q	1/2"	1"(25)	200-800(271-1085)	1200	1627	8500	4.8(136)	90(6.3)	9-1/32"(230.5)	3.85	1.75	3/8"	85.0	4.7
NC-4255QP	1/2"	1"(25)	200-800(271-1085)	1200	1627	8500	4.8(136)	90(6.3)	7-1/32"(179)	4.0	1.80	3/8"	85.0	4.7
NC-4255QH	1/2"	1"(25)	200-800(271-1085)	1200	1627	8500	4.8(136)	90(6.3)	7-1/32"(179)	3.7	1.70	3/8"	85.0	4.7

AIR IMPACT WRENCH

NC-3610Q

3/8" DRIVE AIR IMPACT WRENCH

Jumbo Hammer Type
Air inlet : 1/4"

10 pieces in one carton

Exhaust

NC-3210

3/8" DRIVE AIR IMPACT WRENCH

Twin Hammer Type
Air inlet : 1/4"

10 pieces in one carton

Exhaust

NC-3831

3/8" DRIVE AIR IMPACT WRENCH

Twin Dog Type
Air inlet : 1/4"

10 pieces in one carton

Exhaust

NC-398

3/8" DRIVE AIR ANGLE IMPACT WRENCH

Jumbo Hammer Type
Air inlet : 1/4"

12 pieces in one carton

NC-398
300FT-LB/407Nm
NC-498
400FT-LB/542Nm
MAX TORQUE

Exhaust

NC-3410

3/8" DRIVE AIR IMPACT WRENCH

Rocking Dog Type
Air inlet : 1/4"

20 pieces in one carton

Exhaust

NC-3810

3/8" DRIVE AIR IMPACT WRENCH

Twin Dog Type
Air inlet : 1/4"

20 pieces in one carton

- Butterfly type forward/reverse trigger
- 180 degree turnaround air inlet
- Three speed adjusting switch

Exhaust

NC-3910

3/8" DRIVE AIR IMPACT WRENCH

Twin Dog Type
Air inlet : 1/4"

10 pieces in one carton

NC-3911

3/8" DRIVE AIR IMPACT WRENCH

Twin Dog Type
Air inlet : 1/4"

10 pieces in one carton

NC-3812

3/8" DRIVE AIR IMPACT WRENCH

Twin Dog Type
Air inlet : 1/4"

10 pieces in one carton

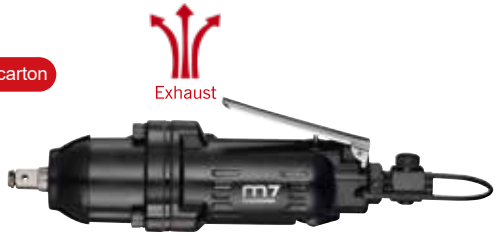

RA-111

3/8" DRIVE AIR IMPACT WRENCH

Twin Hammer Type
Air inlet : 1/4"

10 pieces in one carton

	Square Drive Inch	Bolt Capacity Inch (mm)	Torque Range FT-LB (Nm)	Max Torque FT-LB	Max Torque Nm	Free Speed R.P.M	Avg. Air Consumption CFM (L/min)	Air Pressure PSI (bar)	Overall Length Inch (mm)	Net Weight LBS	Net Weight kg	Air Hose Inch	Sound Pressure dBA	Vibration Level m/s²
NC-3610Q	3/8"	1/2"(13)	100-300(136-407)	350	474	8000	4.4(124)	90 (6.3)	4-9/16" (115.5)	3.3	1.50	3/8"	85.0	2.8
NC-3210	3/8"	1/2"(13)	100-300(136-407)	350	474	10000	4.0(113)	90 (6.3)	5-5/8" (142)	3.3	1.50	3/8"	92.1	3.6
NC-3831	3/8"	M12	80-120(108-162)	180	244	8000	10(283)	90 (6.3)	7-9/32" (185)	2.9	1.34	3/8"	93.0	4.9
NC-398	3/8"	9/16" (14)	50-200(68-271)	300	407	6500	4.2(119)	90 (6.3)	9-3/4"(247)	3.0	1.37	3/8"	85.0	2.0
NC-3410	3/8"	3/8"(10)	5-50(7-68)	75	102	10000	2.5(71)	90 (6.3)	6-1/4" (159)	1.7	0.80	3/8"	92.1	3.6
NC-3810	3/8"	3/8"(10)	5-50(7-67)	75	101	11000	2.3(65)	90 (6.3)	5-15/32" (139)	1.1	0.50	3/8"	91.0	3.6
NC-3910	3/8"	5/16"(8)	5-37(7-50)	66	89	8500	8.5(240)	90 (6.3)	10-7/16"(265)	3.5	1.60	3/8"	90.0	5.1
NC-3911	3/8"	3/8"(10)	5-44(7-60)	96	130	7000	7.0(198)	90 (6.3)	9-7/16"(240)	3.5	1.60	3/8"	92.0	5.1
NC-3812	3/8"	M10~M12	60-120(81-162)	180	244	8000	10(283)	90 (6.3)	7-31/64" (190)	2.3	1.06	3/8"	97.0	5.1
RA-111	3/8"	5/16" (8)	3.7-36.9(5-50)	50	68	8500	8.5(255)	90 (6.3)	8-1/4"(208)	2.2	1.0	3/8"	96.7	4.9

NC-4233Q
NC-4233QH

(EZ GREASE ANVIL)

1/2" DRIVE AIR IMPACT WRENCH

Twin Hammer Type
Air inlet : 1/4"

PATENT GREASE HOLE
(NC-4233QH)

FOR EZ GREASE VERSION ONLY

Exhaust

- Rotor blades attached with springs which prolong durability.
- Shorter air inlet path to boost air efficiency.
- simple mechanism for easy maintenance.
- Air inlet 360 degree swivel.
- Composite material light design.
- 3 setting forward power regulator for controlled run up.

45% Lighter

NC-4233TL

1/2" DRIVE AIR IMPACT WRENCH

Twin Hammer Type
Air inlet : 1/4"

8 pieces in one carton

- Forward operation torque is limited 50 ~ 80 Nm for vehicle tire service.
- 6 rotor-blades makes efficient starting torque.

Exhaust

NC-4236
NC-4236Q

1/2" DRIVE AIR IMPACT WRENCH

Twin Hammer Type
Air inlet : 1/4"

8 pieces in one carton

60% more Powerful

Exhaust

NC-4610
NC-4610Q

1/2" **DRIVE AIR IMPACT WRENCH**

Jumbo Hammer Type
Air inlet : 1/4"

10 pieces in one carton

- Best in class performance for a tool of just 115.5 mm long and weight 1.6 Kg.
- The minimum size of this tool will allow greater access to tight and limited spaces.
- Small but with greater power. Reach 450-ft-lb in just 5 seconds.
- Low noise sound level 85 db.
- Common application to narrow working place and Agricultural maintenance. Powerful yet compact.

60% Lighter

60% Shorter

Exhaust

NC-4256
NC-4256Q
NC-4256Q-2

1/2" **DRIVE AIR IMPACT WRENCH**

Twin Hammer Type
Air inlet : 1/4"

10 pieces in one carton

NC-4256Q-2 is equipped with 2" extended anvil

Exhaust

NC-4258

1/2" **DRIVE AIR IMPACT WRENCH**

Twin Hammer Type
Air inlet : 1/4"

8 pieces in one carton

Exhaust

	Square Drive Inch	Bolt Capacity Inch (mm)	Torque Range FT-LB (Nm)	Max Torque FT-LB	Max Torque Nm	Free Speed R.P.M	Avg. Air Consumption CFM (L/min)	Air Pressure PSI (bar)	Overall Length Inch (mm)	Net Weight LBS	Net Weight kg	Air Hose Inch	Sound Pressure dBA	Vibration Level m/s²
NC-4233Q	1/2"	3/4"(19)	200-500(271-678)	850	1152	9000	4.6(132)	90(6.3)	7-1/2"(190)	4.6	2.10	3/8"	85.0	4.4
NC-4233QH	1/2"	3/4"(19)	200-500(271-678)	850	1152	9000	4.6(132)	90(6.3)	7-1/2"(190)	4.6	2.10	3/8"	85.0	4.4
NC-4233TL	1/2"	3/4"(19)	37-59(50-80)	850	1152	2800	4.6(132)	90(6.3)	7-1/2"(190)	4.6	2.10	3/8"	85.0	4.4
NC-4236	1/2"	1"(25)	200-700(271-949)	1000	1355	7500	5.5(155)	90(6.3)	6-45/64"(171)	5.7	2.60	3/8"	87.0	4.5
NC-4236Q	1/2"	1"(25)	200-700(271-949)	1000	1355	7500	5.5(155)	90(6.3)	6-45/64"(171)	5.7	2.60	3/8"	83.0	4.5
NC-4610	1/2"	5/8"(16)	200-350(271-475)	450	610	9000	4.4(124)	90(6.3)	4-9/16"(115.5)	3.5	1.60	3/8"	93.0	2.8
NC-4610Q	1/2"	5/8"(16)	200-350(271-475)	400	542	9000	4.4(124)	90(6.3)	4-9/16"(115.5)	3.5	1.60	3/8"	85.0	2.8
NC-4256	1/2"	1"(25)	200-900(271-1220)	1100	1491	9000	5.1(144)	90(6.3)	5-9/16"(141)	4.0	1.80	3/8"	95.0	2.8
NC-4256Q	1/2"	1"(25)	200-900(271-1220)	1000	1356	7000	5.1(144)	90(6.3)	5-9/16"(141)	4.0	1.80	3/8"	85.0	2.8
NC-4256Q-2	1/2"	1"(25)	200-900(271-1220)	1000	1356	7000	5.1(144)	90(6.3)	7-9/16"(191)	4.2	1.90	3/8"	85.0	2.8
NC-4258	1/2"	5/8"(16)	150-300(203-407)	400	542	7000	4.2(119)	90(6.3)	7-1/4"(185)	5.6	2.50	3/8"	93.0	4.4

NC-4650
NC-4650H

1/2" DRIVE AIR IMPACT WRENCH

Jumbo Hammer Type
Air inlet : 1/4"

10 pieces in one carton

PATENT GREASE HOLE

FOR EZ GREASE VERSION ONLY

Exhaust

FEATURES

- Ergonomic design, lightweight 1.4kg
- Excellent Max torque 900NM(650FT/LB)
- Mini type with overall length 104mm, ultralight and easy to use.

NC-4650H

EZ GREASE

NC-498

1/2" DRIVE AIR ANGLE IMPACT WRENCH

Jumbo Hammer Type
Air inlet : 1/4"

12 pieces in one carton

Exhaust

NC-4811

1/2" DRIVE AIR IMPACT WRENCH

Twin Dog Type
Air inlet : 1/4"

10 pieces in one carton

Exhaust

NC-4630
NC-4630Q

1/2" DRIVE AIR IMPACT WRENCH

Jumbo Hammer Type
Air inlet : 1/4"

68% Lighter

60% Shorter

10 pieces in one carton

Exhaust

NC-4210N

1/2" DRIVE AIR IMPACT WRENCH

Twin Hammer Type
Air inlet : 1/4"

10 pieces in one carton

- stubby impact sockets, 6 points:5pcs 13,17,19,22,24 mm

NC-4610N

1/2" DRIVE AIR IMPACT WRENCH

Twin Hammer Type
Air inlet : 1/4"

10 pieces in one carton

- stubby impact sockets, 6 points:5pcs 13,17,19,22,24 mm

	Square Drive Inch	Bolt Capacity Inch (mm)	Torque Range FT-LB (Nm)	Max Torque FT-LB	Max Torque Nm	Free Speed R.P.M	Avg. Air Consumption CFM (L/min)	Air Pressure PSI (bar)	Overall Length Inch (mm)	Net Weight LBS	Net Weight kg	Air Hose Inch	Sound Pressure dBA	Vibration Level m/s²
NC-4650	1/2"	5/8"(16)	180-400(244-542)	650	900	9000	4.69(132.8)	90(6.3)	4-1/16"(104)	3.3	1.40	3/8"	95.0	2.4
NC-498	1/2"	5/8" (16)	80-300(108-407)	400	542	6500	4.2(119)	90 (6.3)	9-3/4"(247)	3.0	1.37	3/8"	85.0	2.0
NC-4650H	1/2"	5/8"(16)	180-400(244-542)	650	900	9000	4.69(132.8)	90(6.3)	4-1/16"(104)	3.3	1.40	3/8"	95.0	2.4
NC-4630	1/2"	5/8"(16)	100-400(136-542)	450	610	9000	4.4(124)	90(6.3)	3-27/32"(97)	3.3	1.50	3/8"	96.0	2.8
NC-4630Q	1/2"	5/8"(16)	200-350(271-475)	450	610	9000	4.4(124)	90(6.3)	3-27/32"(97)	3.3	1.50	3/8"	85.0	2.8
NC-4811	1/2"	9/16"(14)	118-140 (160-189)	210	285	5500	8.5(240)	90(6.3)	10-9/32" (260)	3.7	1.70	3/8"	85.0	5.3
NC-4210N	1/2"	5/8"(16)	150-350(203-475)	400	542	10000	4.2(119)	90(6.3)	5-5/8"(142)	3.5	1.60	3/8"	90.6	2.8
NC-4610N	1/2"	5/8"(16)	200-350(271-475)	450	610	9000	4.4(124)	90(6.3)	4-9/16"(115.5)	3.5	1.60	3/8"	93.0	2.8

AIR IMPACT WRENCH

NC-4130

1/2" DRIVE AIR IMPACT WRENCH

Pin clutch Type
Air inlet : 1/4"

10 pieces in one carton

1.2 m/s² VIBRATION LOW

Exhaust

- Low vibration for working
- Clutch delivers smooth and comfortable operation
- Mini size tool body ,ultralight and easy use.
- One-handed forward / reverse button with 3 position power settings
- Compact and ergonomic design with rubber grip
- General Maintenance
- Robust housing and oil bath clutch provide durability Versatile tool
- ideal for all general repairs and maintenance applications

NC-4232Q

1/2" DRIVE AIR IMPACT WRENCH

Twin Hammer Type
Air inlet : 1/4"

10 pieces in one carton

Exhaust

WON PTEN
Air tools U.S.A

- Sophisticated and powerful tool: m7's most advanced composite mini air impact wrench that can use in narrow space.
- Unbelievable light and compact with only 1.35kg
- Quiet series: sound pressure only 83 Dba
- "m7's unique lazy design" that can operate forward/reverse switch with one hand.
- Twin-hammer impact mechanism provides more torque power and stability, and balanced impact can reduce the vibration.
- Ergonomic switch design well suited for operator's hand that provides fingers with most comfortability and controllability.
- m7's unique shark fin shaped body design that creates an esthetics of speed and explosiveness.

NC-4210

1/2" DRIVE AIR IMPACT WRENCH

Twin Hammer Type
Air inlet : 1/4"

10 pieces in one carton

64% Lighter

30% Shorter

Exhaust

NC-4230
NC-4230Q
NC-4240

1/2" DRIVE AIR IMPACT WRENCH

Twin Hammer Type
Air inlet : 1/4"

8 pieces in one carton

- **NC-4240 is equipped with 2" extended anvil**

Exhaust

NC-4600

3/8" & 1/2" DRIVE AIR IMPACT WRENCH

Air inlet : 1/4"
Jumbo Hammer Type

10 pieces in one carton

- NC-4600 can equipped with 3/8" & 1/2" anvl

NC-4600-14Kit

3/8" & 1/2" DRIVE AIR IMPACT WRENCH

Air inlet : 1/4"
Jumbo Hammer Type

6 pieces in one carton

- NC-4600 can equipped with 3/8" & 1/2" anvil

Contents :

+1 pc Air Impact Wrench
+2 pc Square Head Drive : 3/8" & 1/2"
+1 pc Lubricating Oil
+1 pc Release Pin
+4 pc Impact Socket : 13-17-19-21 mm
+1 pc Impact Extension Bar : 14mm
+2 pc Bit Holder : 8 mm & 10 mm
+1 pc 12 mm Hex Bit
+1 pc T60 Torx

	Square Drive Inch	Bolt Capacity Inch (mm)	Torque Range FT-LB (Nm)	Max Torque FT-LB	Max Torque Nm	Free Speed R.P.M	Avg. Air Consumption CFM (L/min)	Air Pressure PSI (bar)	Overall Length Inch (mm)	Net Weight LBS	Net Weight kg	Air Hose Inch	Sound Pressure dBA	Vibration Level m/s²
NC-4130	1/2"	5/8"(16)	180-400(244-542)	600	813	9000	4.5(127)	90(6.3)	5-9/16"(142)	3.55	1.61	3/8"	93	1.2
NC-4232Q	1/2"	5/8"(16)	100-400(136-542)	550	746	10000	4.0(113)	90(6.3)	4-3/4"(120)	3.0	1.38	3/8"	83	3.7
NC-4210	1/2"	5/8"(16)	150-350(203-475)	400	542	10000	4.2(119)	90(6.3)	5-5/8"(142)	3.5	1.60	3/8"	90.6	2.8
NC-4230	1/2"	3/4"(19)	180-500(244-678)	700	949	7500	4.5(127)	90(6.3)	6-15/32"(164)	5.5	2.50	3/8"	87	4.5
NC-4230Q	1/2"	3/4"(19)	180-500(244-678)	650	881	6500	4.5(127)	90(6.3)	6-15/32"(164)	5.5	2.50	3/8"	85	4.5
NC-4240	1/2"	3/4"(19)	180-500(244-678)	700	949	7500	4.5(127)	90(6.3)	8-15/32"(215)	5.7	2.60	3/8"	87	4.5
NC-4600	1/2"	5/8"(16)	180-500(244-678)	600	813	9000	4.2(119)	90(6.3)	4"(99)	2.97	1.35	3/8"	96	3.7

AIR IMPACT WRENCH

NC-6266H

(EZ GREASE ANVIL)

3/4" DRIVE AIR IMPACT WRENCH

Twin Hammer Type
Air inlet : 3/8"

- Patent grease hole makes torque/power recover immediately.
- The front housing & back head cover made by magnesium alloy.
- 1500 FT-LB in 5 seconds reverse direction.
- Durability composite material.

6 pieces in one carton

Exhaust

NC-6256Q

3/4" DRIVE AIR IMPACT WRENCH

Air inlet : 1/4"
Twin Hammer Type

10 pieces in one carton

- NC-6256Q is equipped with 3/4" anvil

1627 N.m

SUPER MINI

Exhaust

NC-6201

3/4" DRIVE AIR IMPACT WRENCH

Air inlet : 1/4"
Twin Hammer Type

4 pieces in one carton

- NC-6201 is equipped with 3/4" anvil

Exhaust

	Square Drive	Bolt Capacity	Torque Range	Max Torque		Free Speed	Avg. Air Consumption	Air Pressure	Overall Length	Net Weight		Air Hose	Sound Pressure	Vibration Level
	Inch	Inch (mm)	FT-LB (Nm)	FT-LB	Nm	R.P.M	CFM (L/min)	PSI (bar)	Inch (mm)	LBS	kg	Inch	dBA	m/s²
NC-6266H	3/4"	1-1/4"(30)	200-1300(271-1760)	1500	2034	6000	5.9(169)	90(6.3)	8-1/16 "(205)	6.5	3	1/2"	88.0	5.9
NC-6256Q	3/4"	7/8"(23)	150-900(203-1220)	1200	1627	7000	5.1(144)	90(6.3)	5-11/16"(145)	4.18	1.9	3/8"	85.0	2.8
NC-6201	3/4"	1-3/16"(30)	200-1200(271-1627)	1450	1966	5700	6.4(181)	90(6.3)	8-3/4"(222)	8.14	3.7	1/2"	88.0	5.9

NC-6266
NC-6266-6

3/4" DRIVE AIR IMPACT WRENCH

Twin Hammer Type
Air inlet : 3/8"

4 pieces in one carton

NC-6266-6 is equipped with 6" extended anvil

- Torque output 1500ft-lb reached in 5 seconds.
- Light weight 2.95kg.
- The front housing and back head cover made by magnesium alloy.
  Durability composite material.
- Special alloy steel impact mechanism to keep longer life time.

MIGHTY POWER MIGHTY LIGHT

The NC-4255PVC Protective cover can apply on NC-6255

Exhaust

NC-4255PVC

Protective cover

NC-6255Q
NC-6255QH

3/4" DRIVE AIR IMPACT WRENCH

Twin Hammer Type
Air inlet : 1/4"

- Light weight 1.9kg
- The front housing & back head cover made by magnesium alloy
- Durability composite material

8 pieces in one carton

EZ GREASE

PATENT GREASE HOLE FOR EZ GREASE VERSION ONLY

Exhaust

	Square Drive	Bolt Capacity	Torque Range	Max Torque		Free Speed	Avg. Air Consumption	Air Pressure	Overall Length	Net Weight		Air Hose	Sound Pressure	Vibration Level
	Inch	Inch (mm)	FT-LB (Nm)	FT-LB	Nm	R.P.M	CFM (L/min)	PSI (bar)	Inch (mm)	LBS	kg	Inch	dBA	m/s²
NC-6266	3/4"	1-1/4"(30)	200-1300(271-1760)	1500	2034	6000	5.9(169)	90(6.3)	8-1/16" (205)	6.5	2.95	1/2"	88.0	5.9
NC-6266-6	3/4"	1-1/4"(30)	200-1300(271-1760)	1500	2034	6000	5.9(169)	90(6.3)	14-1/16" (355)	7.9	3.60	1/2"	88.0	5.9
NC-6255Q	3/4"	1"(25)	200-1100(271-1491)	1400	1898	8500	4.8(136)	90(6.3)	7-13/16" (198)	4.2	1.90	3/8"	85.0	4.7
NC-6255QH	3/4"	1"(25)	200-1100(271-1491)	1400	1898	8500	4.8(136)	90(6.3)	7-13/16" (198)	4.2	1.90	3/8"	85.0	4.7

AIR IMPACT WRENCH

NC-6113 / 6123

3/4" DRIVE AIR IMPACT WRENCH

Pin Clutch Type
Air inlet : 1/4"

4 pieces in one carton

NC-6123 is equipped with 6" extended anvil

NC-6210 / 6210Q NC-6220

3/4" DRIVE AIR IMPACT WRENCH

Twin Hammer Type
Air inlet : 1/4"

76% Lighter

8 pieces in one carton

- **NC-6220 is equipped with 6" extended anvil**

NC-6236 NC-6236Q

3/4" DRIVE AIR IMPACT WRENCH

Twin Hammer Type
Air inlet : 1/4"

33% Lighter

8 pieces in one carton

- Ultimate power reach 1200 ft-lb under 5seconds.
- Does the toughest job efficiently with industrial level quality & durability.

NC-6216 / NC-6226

3/4" DRIVE AIR IMPACT WRENCH

New Twin Hammer Type
Air inlet : 3/8"

NC-6226 is equipped with 6" extended anvil

4 pieces in one carton

- Composite material

NC-6216PVC
Protective cover

10% Lighter

NC-6213

3/4" DRIVE AIR IMPACT WRENCH

Twin Hammer Type
Air inlet : 3/8"

5 pieces in one carton

- Composite material

NC-6218

3/4" DRIVE AIR IMPACT WRENCH

Twin Hammer Type
Air inlet : 1/2"

2 pieces in one carton

NC-6215 / NC-6225

3/4" DRIVE AIR IMPACT WRENCH

New Twin Hammer Type
Air inlet : 1/4"

4 pieces in one carton

NC-6225 is equipped with 6" extended anvil

NC-6217

3/4" DRIVE AIR IMPACT WRENCH

Twin Hammer Type
Air inlet : 3/8"

4 pieces in one carton

- Alloy steel forward/reverse switch
- torque output 1400ft-lb reached in 5 seconds
- Special Alloy Steel impact mechanism to keep longer life time.

	Square Drive	Bolt Capacity	Torque Range	Max Torque		Free Speed	Avg. Air Consumption	Air Pressure	Overall Length	Net Weight		Air Hose	Sound Pressure	Vibration Level
	Inch	Inch (mm)	FT-LB (Nm)	FT-LB	Nm	R.P.M	CFM (L/min)	PSI (bar)	Inch (mm)	LBS	kg	Inch	dBA	m/s²
NC-6113	3/4"	1"(25)	150-600(203-814)	850	1153	4500	7.0(198)	90(6.3)	10" (252)	10.1	4.6	1/2"	94.3	7.2
NC-6123	3/4"	1"(25)	150-600(203-814)	850	1163	4500	7.0(198)	90(6.3)	14-3/16"(360)	11.6	5.30	1/2"	94.3	7.2
NC-6210	3/4"	3/4"(19)	180-600(244-810)	750	1017	7500	4.5(127)	90(6.3)	6-45/64"(170)	5.6	2.55	3/8"	87.0	4.5
NC-6210Q	3/4"	3/4"(19)	180-600(244-810)	700	949	6500	4.5(127)	90(6.3)	6-45/64"(170)	5.6	2.55	3/8"	85.0	4.5
NC-6220	3/4"	3/4"(19)	180-600(244-810)	750	1017	7500	4.5(127)	90(6.3)	12-23/32"(323)	6.7	3.08	3/8"	87.0	4.5
NC-6236	3/4"	1"(25)	200-900(271-1220)	1200	1627	7500	5.5(155)	90(6.3)	6-45/64" (171)	5.9	2.68	3/8"	87.0	4.5
NC-6236Q	3/4"	1"(25)	200-900(271-1220)	1200	1627	7500	5.5(155)	90(6.3)	6-45/64"(171)	5.9	2.68	3/8"	83.0	4.5
NC-6216	3/4"	1-1/16"(27)	200-1000(271-1356)	1200	1627	6000	6.0(170)	90(6.3)	9-1/4"(235)	9.0	4.10	1/2"	91.2	5.0
NC-6226	3/4"	1-1/16"(27)	200-1000(271-1356)	1200	1627	6000	6.0(170)	90(6.3)	13-3/4"(350)	9.9	4.50	1/2"	91.2	5.0
NC-6213	3/4"	1-1/16"(27)	200-1000(271-1356)	1200	1627	6000	6.9(195)	90(6.3)	9-7/16"(239)	8.5	3.88	1/2"	92.0	5.0
NC-6218	3/4"	1-1/16"(27)	200-1400(271-1898)	1500	2034	6000	6.3(182)	90(6.3)	12-9/16"(320)	12.5	5.70	1/2"	106.0	3.3
NC-6215	3/4"	1"(25)	180-600(244-810)	900	1220	6500	7.0(198)	90(6.3)	9-7/32"(234)	10.0	4.50	1/2"	91.5	10.8
NC-6225	3/4"	1"(25)	180-600(244-810)	900	1220	6500	7.0(182)	90(6.3)	13-3/4"(350)	10.8	4.90	1/2"	91.5	10.8
NC-6217	3/4"	1-1/4"(30)	200-1300(271-1762)	1400	1898	4800	5.4(153)	90(6.3)	8-15/32" (215)	11.0	5.00	1/2"	92.0	6.1

AIR IMPACT WRENCH

NC-8212

1" DRIVE AIR IMPACT WRENCH

New Twin Hammer Type
Air inlet : 3/8"

4 pieces in one carton

Exhaust

NC-8217

1" DRIVE AIR IMPACT WRENCH

Twin Hammer Type
Air inlet : 3/8"

4 pieces in one carton

Exhaust

NC-8219

1" DRIVE AIR IMPACT WRENCH

New Twin Hammer Type
Air inlet : 1/2"

2 pieces in one carton

Exhaust

NC-8237 / 8237-6

1" DRIVE AIR IMPACT WRENCH

Twin Hammer Type
Air inlet : 3/8"

4 pieces in one carton

NC-8237-6 is equipped with 6" extended anvil

Exhaust

NC-8266P / 8266P-6

1" DRIVE AIR IMPACT WRENCH

Twin Hammer Type
Air inlet : 1/2"

2 pieces in one carton

NC-8266P-6 is equipped with 6" extended anvil

33% more Powerful

38% More Powerful

Exhaust

	Square Drive	Bolt Capacity	Torque Range	Max Torque		Free Speed	Avg. Air Consumption	Air Pressure	Overall Length	Net Weight		Air Hose	Sound Pressure	Vibration Level
	Inch	Inch (mm)	FT-LB (Nm)	FT-LB	Nm	R.P.M	CFM (L/min)	PSI (bar)	Inch (mm)	LBS	kg	Inch	dBA	m/s²
NC-8212	1"	1-1/16"(27)	200-1000(271-1356)	1300	1762	6000	6.0(170)	90(6.3)	9-1/4"(235)	9.6	4.40	1/2"	91.2	5.0
NC-8217	1"	1-1/4"(30)	200-1300(271-1762)	1500	2034	4800	5.4(153)	90(6.3)	8-3/4"(222)	11.0	5.00	1/2"	92.0	6.1
NC-8219	1"	1-7/16"(36)	200-1600(271-2170)	1800	2441	4000	11(311)	90(6.3)	12-13/32"(315)	21.6	9.84	1/2"	103.4	16.7
NC-8237	1"	1-3/8"(33)	200-1500(271-2034)	1800	2441	4500	5.4(153)	90(6.3)	8-3/4"(222)	12.8	5.70	1/2"	92.0	6.1
NC-8237-6	1"	1-3/8"(33)	200-1500(271-2034)	1800	2441	4500	5.4(153)	90(6.3)	15-9/16"(395)	14.3	6.50	1/2"	92.0	6.1
NC-8266P	1"	1-3/8"(35)	200-2000(271-2711)	2300	3118	4500	9(255)	90(6.3)	10"(256)	13	5.90	1/2"	92.0	6.1
NC-8266P-6	1"	1-3/8"(35)	200-2000(271-2711)	2300	3118	4500	9(255)	90(6.3)	10"(256)	13.86	6.30	1/2"	92.0	6.1

NC-8343
NC-8343-8

1" DRIVE AIR IMPACT WRENCH

Pin Less Type
Air inlet : 1/2"

1 pieces in one carton

NC-8343-8 is equipped with 8" extended anvil

- M7 UNIQUE SHARK SHAPE DESIGN ON BOTH SIDES
- NEW DESIGNED UP EXHAUST
- LOW VIBRATION OFFERS A SMOOTH OPERATION
- POWERFUL & DURABLE

NC-8211
NC-8221

1" DRIVE AIR IMPACT WRENCH

Twin Hammer Type
Air inlet : 1/2"

1 pieces in one carton

NC-8221 is equipped with 6" extended anvil

NC-8232

1" DRIVE AIR IMPACT WRENCH

New Twin Hammer Type
Air inlet : 1/2"

1 pieces in one carton

NC-8311
NC-8351

1" DRIVE AIR IMPACT WRENCH

Pin Less Type
Air inlet : 1/2"

2 pieces in one carton

NC-8351 is equipped with 6" extended anvil

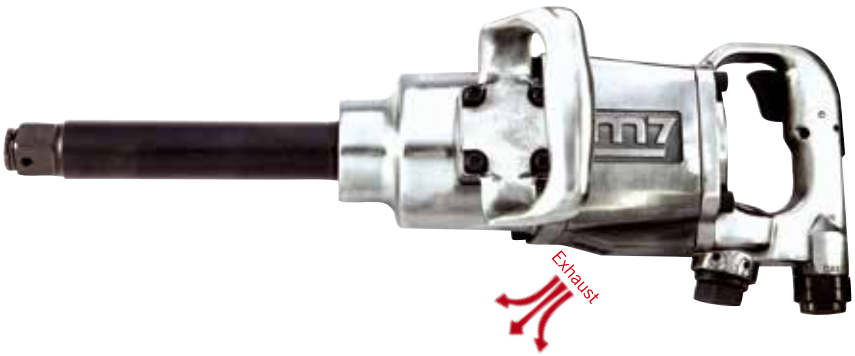

NC-8266S
NC-8266S-6
NC-8266S-8

1" DRIVE AIR IMPACT WRENCH

Air inlet : 1/2"
Twin Hammer Type

6.0 KG
3118 Nm

6 pieces in one carton

- **NC-8266S-6 is equipped with 6" extended anvil**
- **NC-8266S-8 is equipped with 8" extended anvil**
- The front housing made by magnesium alloy
- Durability composite material

NC-8216
NC-8226
NC-8226Q

1" DRIVE AIR IMPACT WRENCH

Twin Hammer Type
Air inlet : 1/2"

48% Lighter

NC-8226Q

2 pieces in one carton

- **NC-8226 is equipped with 6" extended anvil**

	Square Drive Inch	Bolt Capacity Inch (mm)	Torque Range FT-LB (Nm)	Max Torque FT-LB	Max Torque Nm	Free Speed R.P.M	Avg. Air Consumption CFM (L/min)	Air Pressure PSI (bar)	Overall Length Inch (mm)	Net Weight LBS	Net Weight kg	Air Hose Inch	Sound Pressure dBA	Vibration Level m/s²
NC-8343	1"	1-3/8"(33)	200-1600(271-2170)	1800	2441	3900	11.5(325)	90(6.3)	15"(381)	27.7	12.5	1/2"	103	6.3
NC-8343-8	1"	1-3/8"(33)	200-1600(271-2170)	1800	2441	3900	11.5(325)	90(6.3)	23"(590)	30.6	13.9	1/2"	103	6.3
NC-8211	1"	1-3/8"(33)	200-1600(271-2170)	1800	2441	5000	10.0(284)	90(6.3)	14-9/16"(370)	22.2	10.1	1/2"	100	10.0
NC-8221	1"	1-3/8"(33)	200-1600(271-2170)	1800	2441	5000	10.0(284)	90(6.3)	20-7/8"(530)	25.2	11.5	1/2"	100	10.0
NC-8232	1"	1-7/16"(36)	200-1600(271-2170)	1800	2441	4000	11.0(311)	90(6.3)	20-13/32"(518)	24.8	11.3	1/2"	102	11.5
NC-8311	1"	1-3/8" (33)	200-1600(271-2170)	1800	2441	4000	11.5(325)	90(6.3)	15" (380)	24.0	10.9	1/2"	101	7.3
NC-8351	1"	1-3/8" (33)	200-1600(271-2170)	1800	2441	4000	11.5(325)	90(6.3)	20" (510)	27.6	12.5	1/2"	101	7.3
NC-8266S	1"	1-3/8"(35)	200-1800(272-2448)	2300	3118	4500	7.5(212)	90(6.3)	16-7/8"(430)	13.2	6.0	1/2"	92	6.1
NC-8266S-6	1"	1-3/8"(35)	200-1800(272-2448)	2300	3118	4500	7.5(212)	90(6.3)	22-3/4"(580)	15.84	6.0	1/2"	92	6.1
NC-8266S-8	1"	1-3/8"(35)	200-1800(272-2448)	2300	3118	4500	7.5(212)	90(6.3)	24-3/4"(630)	16.28	6.0	1/2"	92	6.1
NC-8216	1"	1-3/8"(33)	200-1600(271-2170)	1800	2441	6000	9.0(254)	90(6.3)	13-1/2"(343)	15.5	7.0	1/2"	102	9.3
NC-8226	1"	1-3/8"(33)	200-1600(271-2170)	1800	2441	6000	9.0(254)	90(6.3)	19-3/16"(487)	18.4	8.4	1/2"	102	9.3
NC-8226Q	1"	1-3/8"(33)	200-1600(271-2170)	1800	2441	6000	9.0(254)	90(6.3)	19-3/16"(487)	18.4	8.4	1/2"	90	9.3

AIR IMPACT WRENCH

NC-8332

Exhaust

NC-8332
NC-8332-6

1" DRIVE AIR IMPACT WRENCH

Pin Less Type
Air inlet : 1/2"

NC-8332-6 is equipped with 6" extended anvil.

2 pieces in one carton

Exhaust

NC-8382
NC-8382-8

1" DRIVE AIR IMPACT WRENCH

Pin Less Type
Air inlet : 1/2"

NC-8382-8 is equipped with 8" extended anvil

- Max. torque 2500 ft-lb (reverse in 5 seconds).
- Weight 30% less comparing with equal torque output models to reduce physical loading 30%. Torque output 38% higher comparing with equal weight models.
- Two-stage trigger for easier operation.

38% more Powerful

40% Lighter

NC-8382 **2** piece in one carton

NC-8382-8 **1** piece in one carton

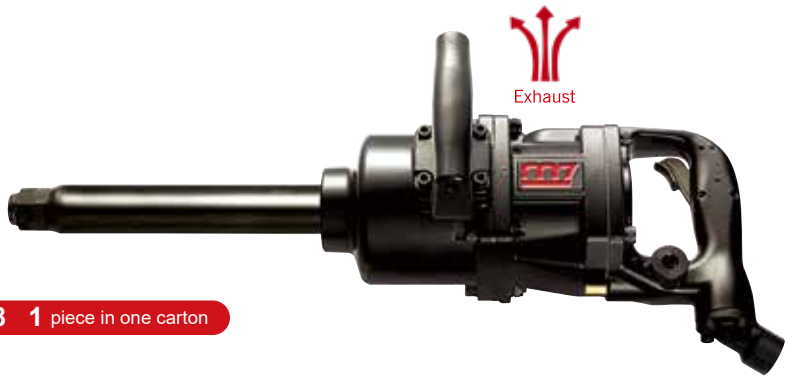

Exhaust

NC-8242
NC-8242-8

1" DRIVE AIR IMPACT WRENCH

Twin Hammer Type
Air inlet : 1/2"

NC-8242-8 is equipped with 8" extended anvil

NC-8242 **2** piece in one carton

NC-8242-8 **1** piece in one carton

Exhaust

NC-8252
NC-8262

1" DRIVE AIR IMPACT WRENCH

Twin Hammer Type
Air inlet : 1/2"

1 pieces in one carton

NC-8262 is equipped with 6" extended anvil

NC-8322
NC-8342

1" DRIVE AIR IMPACT WRENCH

Pin Less Type
Air inlet : 1/2"

1 pieces in one carton

NC-8342 is equipped with 8" extended anvil

NC-8362
NC-8372

1" DRIVE AIR IMPACT WRENCH

Pin Less Type
Air inlet : 1/2"

1 pieces in one carton

NC-8372 is equipped with 6" extended anvil

NC-9223
NC-9243

1-1/2" DRIVE AIR IMPACT WRENCH

New Twin Hammer Type
Air inlet : 1/2"

1 pieces in one carton

NC-9243 is equipped with 8" extended anvil

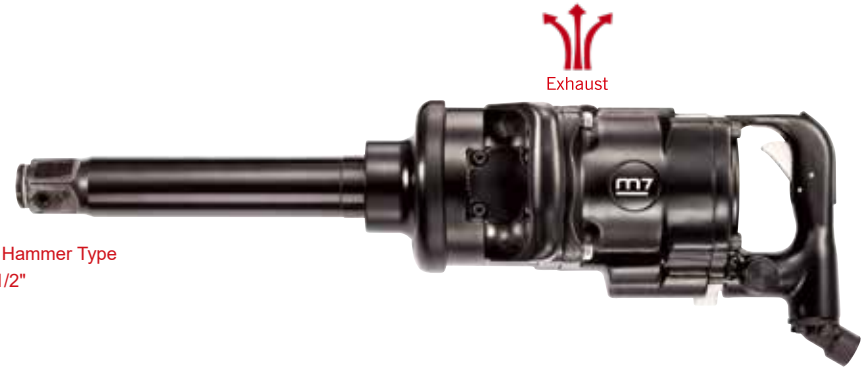

	Square Drive	Bolt Capacity	Torque Range	Max Torque		Free Speed	Avg. Air Consumption	Air Pressure	Overall Length	Net Weight		Air Hose	Sound Pressure	Vibration Level
	Inch	Inch (mm)	FT-LB (Nm)	FT-LB	Nm	R.P.M	CFM (L/min)	PSI (bar)	Inch (mm)	LBS	kg	Inch	dBA	m/s²
NC-8332	1"	1-3/8"(25)	200-2000(271-2710)	2500	3390	3300	8.0(226.5)	90(6.3)	14-11/16"(372.6)	20.7	9.4	3/8"	103.8	8.22
NC-8332-6	1"	1-3/8"(25)	200-2000(271-2710)	2500	3390	3300	8.0(226.5)	90(6.3)	14-11/16"(372.6)	20.7	9.4	3/8"	103.8	8.22
NC-8382	1"	1-9/16"(40)	200-2000(271-2710)	2500	3390	5000	15.9(450)	90(6.3)	14-17/32"(370)	22.0	11.0	1/2"	100.0	6.4
NC-8382-8	1"	1-9/16"(40)	200-2000(271-2710)	2500	3390	5000	15.9(450)	90(6.3)	22-15/32"(570)	27.5	12.5	1/2"	100.0	6.4
NC-8242	1"	1-9/16"(40)	200-2000(271-2710)	2500	3390	5000	15.9(450)	90(6.3)	14-17/32"(370)	23.1	10.5	1/2"	100.0	6.4
NC-8242-8	1"	1-9/16"(40)	200-2000(271-2710)	2500	3390	5000	15.9(450)	90(6.3)	22-15/32"(570)	26.2	11.9	1/2"	100.0	6.4
NC-8252	1"	1-7/16"(36)	200-2000(271-2170)	2400	3250	4000	10.0(284)	90(6.3)	15-3/8"(390)	26.6	12.1	1/2"	100.0	10.0
NC-8262	1"	1-7/16"(36)	200-2000(271-2170)	2400	3250	4000	10.0(284)	90(6.3)	22"(560)	29.7	13.5	1/2"	100.0	10.0
NC-8322	1"	1-7/16" (36)	200-2000(271-2170)	2500	3390	3300	11.0(311)	90(6.3)	17-5/16" (440)	34.2	15.5	1/2"	93.9	8.8
NC-8342	1"	1-7/16" (36)	200-2000(271-2170)	2500	3390	3300	11.0(311)	90(6.3)	24-3/8" (619)	38.0	17.3	1/2"	93.9	8.8
NC-8362	1"	1-7/16" (36)	200-2000(271-2170)	2500	3390	3700	11.0(284)	90(6.3)	17-7/8" (455)	35.2	16.0	1/2"	93.9	8.8
NC-8372	1"	1-7/16" (36)	200-2000(271-2170)	2500	3390	3700	11.0(284)	90(6.3)	24-7/32" (615)	38.7	17.6	1/2"	93.9	8.8
NC-9223	1-1/2"	2"(50)	200-3000(271-4065)	3500	4746	3000	16.0(453)	90(6.3)	17-3/4" (450)	43.2	19.7	3/4"	104.5	8.8
NC-9243	1-1/2"	2"(50)	200-3000(271-4065)	3500	4746	3000	16.0(453)	90(6.3)	24-1/4" (616)	50.2	22.8	3/4"	104.5	8.8

NC-4232Q KIT

1/2" DRIVE AIR IMPACT WRENCH 11 PCS

FEATURES

- 1pc - 1/2" Air Impact Wrench
- 7pcs - Impact sockets, MA411M13，17，19，21，22，24，27
- 1pc - 5" Extension bar
- 1pc - Mini Lubricator SW-12
- 1pc - 1/4" plug

5 pieces in one carton

NC-4233Q KIT

1/2" DRIVE AIR IMPACT WRENCH 11 PCS

FEATURES

- 1pc - 1/2" Air Impact Wrench
- 7pcs - Impact sockets, MA411M13，17，19，21，22，24，27
- 1pc - 5" Extension bar
- 1pc - Mini Lubricator SW-12
- 1pc - 1/4" plug

5 pieces in one carton

NC-4255Q KIT

1/2" DRIVE AIR IMPACT WRENCH 11 PCS

FEATURES

- 1pc - 1/2" Air Impact Wrench
- 7pcs - Impact sockets, MA411M13，17，19，21，22，24，27
- 1pc - 5" Extension bar
- 1pc - Mini Lubricator SW-12
- 1pc - 1/4" plug

5 pieces in one carton

NC-4650 KIT

1/2" DRIVE AIR IMPACT WRENCH 11 PCS

FEATURES

- 1pc - 1/2" Air Impact Wrench
- 7pcs - Impact sockets, MA411M13，17，19，21，22，24，27
- 1pc - 5" Extension bar
- 1pc - Mini Lubricator SW-12
- 1pc - 1/4" plug

5 pieces in one carton

NC-6236 KIT

3/4" DRIVE AIR IMPACT WRENCH 11 PCS

FEATURES

- 1pc - 3/4" Air Impact Wrench
- 7pcs - Impact sockets, MA611M24，27，30，32，33，34，36
- 1pc - 7" Extension bar
- 1pc - Mini Lubricator SW-12
- 1pc - 1/4" plug

2 pieces in one carton

NC-6255Q KIT

3/4" DRIVE AIR IMPACT WRENCH 11 PCS

FEATURES

- 1pc - 3/4" Air Impact Wrench
- 7pcs - Impact sockets, MA611M24，27，30，32，33，34，36
- 1pc - 7" Extension bar
- 1pc - Mini Lubricator SW-12
- 1pc - 1/4" plug

2 pieces in one carton

NC-0410KIT

1/2" DRIVE AIR IMPACT WRENCH 10 PCS

- 1pc - Air Impact Wrench
- 5pcs - Impact sockets, 6 points, standard length 11, 13 mm, deep version 17, 19, 21mm
- 1pc - Extension bar 3"
- 1pc - Mini Oiler 1/4" female x 1/4" male
- 1pc - 1/4" plug
- 1pc - Oil box

5 pieces in one carton

NC-0410M3
NC-4258

NC-0415KIT

1/2" DRIVE AIR IMPACT WRENCH 15 PCS

- 1pc-1/2" Air Impact Wrench
- 10pcs-Impact sockets, 6 points, standard length 9, 10, 11, 13, 14, 17, 19, 22, 24, 27mm
- 1pc-Extension bar 5"
- 1pc-Allen Key : 4mm
- 1pc-Mini Oiler 1/4" female x 1/4" male
- 1pc-1/4" plug

5 pieces in one carton

NC-0425M3
NC-4258

NC-0425M4
NC-4230

NC-0425M5
NC-4233

NC-0415M9
NC-4256

NC-0615KIT

3/4" DRIVE AIR IMPACT WRENCH 15 PCS

- 1pc-3/4" Air Impact Wrench
- 8pcs-Impact sockets, 6 points, standard length 26, 27, 29, 30, 32, 35, 36, 38mm
- 1pc-Extension bar 7"
- 1pc-Universal Joint
- 2pcs-Allen Key : 4mm, 5mm
- 1pc-Mini Oiler 1/4"-6113,6215 , 3/8"-6216
- 1pc-1/4" plug - 6113.6215 , 3/8" plug - 6216
- 1pc-O-Ring & Pin

2 pieces in one carton

NC-0615M0
NC-6113

NC-0615M1
NC-6216

NC-0615M2
NC-6215

NC-4255Q-41KIT
NC-4255Q-41KITA05

2 pieces in one carton

FEATURES

Expert Quality,Commonly used in car repair special sets.
Supplied complete in a two tone 1/4 drawer EVA insert tray made from closed cell foam
suitable to be used in M7 Expert tool chests and other manufacturers similar tool chests.
Set with torque wrench for user correction.

Can be customized

NC-4255Q-41KITA05

AIR IMPACT WRENCH

REPAIR KIT

NC-3210K01	Anvil Ass'y	Hammer	Rotor Blade	Gasket	O-Ring	Muffler	Rubber Grip	Retaining Ring	Washer	Rotor	Bushing	Rubber Cap
	■	■	■	■	■							
NC-3610QK01	Anvil Ass'y	Hammer	Rotor Blade	Gasket	O-Ring	Muffler	Rubber Grip	Retaining Ring	Washer	Rotor	Bushing	Rubber Cap
	■	■	■	■	■	■	■					
NC-4210K01	Anvil Ass'y	Hammer	Rotor Blade	Gasket	O-Ring	Muffler	Rubber Grip	Retaining Ring	Washer	Rotor	Bushing	Rubber Cap
	■	■	■	■	■							
NC-4216K01	Anvil Ass'y	Hammer	Rotor Blade	Gasket	O-Ring	Muffler	Rubber Grip	Retaining Ring	Washer	Rotor	Bushing	Rubber Cap
	■	■	■	■								
NC-4226K01	Anvil Ass'y	Hammer	Rotor Blade	Gasket	O-Ring	Muffler	Rubber Grip	Retaining Ring	Washer	Rotor	Bushing	Rubber Cap
	■	■	■	■								
NC-4230K01	Anvil Ass'y	Hammer	Rotor Blade	Gasket	O-Ring	Muffler	Rubber Grip	Retaining Ring	Washer	Rotor	Bushing	Rubber Cap
	■	■			■							
NC-4230QK01	Anvil Ass'y	Hammer	Rotor Blade	Gasket	O-Ring	Muffler	Rubber Grip	Retaining Ring	Washer	Rotor	Bushing	Rubber Cap
	■		■	■	■	■						
NC-4232QK01	Anvil Ass'y	Hammer	Rotor Blade	Gasket	O-Ring	Muffler	Rubber Grip	Retaining Ring	Washer	Rotor	Bushing	Rubber Cap
	■	■	■		■	■						
NC-4233QK01	Anvil Ass'y	Hammer	Rotor Blade	Gasket	O-Ring	Muffler	Rubber Grip	Retaining Ring	Washer	Rotor	Bushing	Rubber Cap
	■		■	■		■						
NC-4236K01	Anvil Ass'y	Hammer	Rotor Blade	Gasket	O-Ring	Muffler	Rubber Grip	Retaining Ring	Washer	Rotor	Bushing	Rubber Cap
	■		■	■	■							
NC-4236QK01	Anvil Ass'y	Hammer	Rotor Blade	Gasket	O-Ring	Muffler	Rubber Grip	Retaining Ring	Washer	Rotor	Bushing	Rubber Cap
	■		■	■	■	■						
NC-4255QK01	Anvil Ass'y	Hammer	Rotor Blade	Gasket	O-Ring	Muffler	Rubber Grip	Retaining Ring	Washer	Rotor	Bushing	Rubber Cap
	■		■	■		■						
NC-4256QK01	Anvil Ass'y	Hammer	Rotor Blade	Gasket	O-Ring	Muffler	Rubber Grip	Retaining Ring	Washer	Rotor	Bushing	Rubber Cap
	■	■	■	■	■	■	■	■				
NC-4258K01	Anvil Ass'y	Hammer	Rotor Blade	Gasket	O-Ring	Muffler	Rubber Grip	Retaining Ring	Washer	Rotor	Bushing	Rubber Cap
	■		■	■								
NC-4610K01	Ball Bearing	Reverse Valve	Rotor Blade	Gasket	O-Ring	Muffler	Spring Pin	Steel Ball	Washer	Rotor	Bushing	Rubber Cap
	■	■	■	■			■	■	■	■		
NC-4610QK01	Anvil Ass'y	Hammer	Rotor Blade	Gasket	O-Ring	Muffler	Rubber Grip	Retaining Ring	Washer	Rotor	Bushing	Rubber Cap
	■	■	■	■	■	■	■		■	■		
NC-4611QK01	Anvil Ass'y	Hammer	Rotor Blade	Gasket	O-Ring	Muffler	Rubber Grip	Retaining Ring	Washer	Rotor	Bushing	Rubber Cap
	■		■	■	■	■	■	■				
NC-4620QK01	Anvil Ass'y	Hammer	Rotor Blade	Gasket	O-Ring	Muffler	Rubber Grip	Retaining Ring	Washer	Rotor	Bushing	Rubber Cap
	■	■	■	■	■							

	Anvil Ass'y	Hammer	Rotor Blade	Gasket	O-Ring	Muffler	Rubber Grip	Retaining Ring	Side Handle	Rotor	Bushing	Rubber Cap
NC-4650K01	■	■	■	■	■							
NC-6210K01	■	■			■							
NC-6210QK01	■		■	■	■	■						
NC-6216K01	■		■	■		■						
NC-6217K01	■	■	■	■								
NC-6218K01	■		■	■	■							
NC-6236QK01	■		■	■	■	■						
NC-6255QK01	■	■	■	■	■	■						
NC-6266K01	■	■	■	■	■	■						
NC-8216K01	■		■	■	■							■
NC-8217K01	■			■								
NC-8219K01	■	■	■	■	■			■				
NC-8226K01	■		■	■	■							■
NC-8237K01	■	■	■	■								
NC-8311K01	■	■	■	■	■				■	■	■	
NC-8343-8K01	■	■	■	■	■							
NC-8351K01	■	■	■	■	■				■	■	■	

REPAIR KIT

AIR RATCHET WRENCH

AIR RATCHET WRENCH

NE-383
NE-483

1/2" & 3/8"

TWO STEP TRIGGER

DRIVE AIR
RATCHET WRENCH
Air inlet : 1/4"

10 pieces in one carton

NE-4815

1/2" DRIVE AIR RATCHET WRENCH

Air inlet : 1/4"

10 pieces in one carton

- 0.9 HP high performance motor
- 3 pcs planet gear enhanced durability and stability
- Handle design with improved grip
- 360 degree swivel exhaust

NE-3305 / NE-4305

3/8" & 1/2" DRIVE AIR RATCHET WRENCH

Air inlet : 1/4"

10 pieces in one carton

- Strengthen frame above the ratchet head for heavy duty durability
- Twin-Gear mechanism for better lifetime
- Long handle design reach narrow and limited spaces

	Square Drive Inch	Torque Range FT-LB (Nm)	Max Torque FT-LB	Max Torque Nm	Free Speed R.P.M	Avg. Air Consumption CFM (L/min)	Air Pressure PSI (bar)	Overall Length Inch (mm)	Net Weight LBS	Net Weight kg	Air Hose Inch	Sound Pressure dBA	Vibration Level m/s²
NE-4815	1/2"	40-120 (54-163)	150	204	170	4.8(136)	90 (6.3)	12-1/4"(313)	3.39	1.54	3/8"	93	2.5
NE-3305	3/8"	15-55 (20-75)	70	95	160	5(142)	90 (6.3)	15-3/8"(390)	3.52	1.6	3/8"	82	1.2
NE-4305	1/2"	15-55 (20-75)	70	95	160	5(142)	90 (6.3)	15-3/8"(390)	3.52	1.6	3/8"	82	1.2
NE-383	3/8"	15-65 (13.5-88)	100	135.6	250	5.0(141)	90 (6.3)	10-29/32"(277)	2.82	1.28	3/8"	85	2.0
NE-483	1/2"	15-65 (13.5-88)	100	135.6	250	5.0(141)	90 (6.3)	10-29/32"(277)	2.82	1.28	3/8"	85	2.0

AIR RATCHET WRENCH

NE-3901/NE-4901

3/8"&1/2" DRIVE AIR IMPACT RATCHET WRENCH

Air inlet : 1/4"

FEATURES

- No force is generated when used
- Strike device structure makes it easier to fix the nut
- Small vibration frequency
- Improve instant torque
- Ergonomic design, comfort and convenience for using at confined area

NO KICK!!

NE-3920

3/8" DRIVE AIR IMPACT RATCHET WRENCH

20 pieces in one carton

Unicorn Hammer Type

Air inlet : 1/4"

FEATURES

- Ratchet wrench design (Patented impact hammer mechanism)
- Non-reaction
- Compact, lightweight, dust free head-sealed
- Ergonomic design, comfort and convenience for using at confined area

NO KICK!!

NE-462

Pin Clutch Type

Air inlet : 1/4"

10 pieces in one carton

1/2" DRIVE AIR IMPACT RATCHET WRENCH

- Pin-Clutch design mechanism generates 100 Nm torque output.
- Fasten to Stop design provides comfortable feel.

NO KICK!!

NE-462T

Pin Ciltch Type

Air inlet : 1/4"

10 pieces in one carton

1/2" DRIVE AIR ANGLE IMPACT RATCHET

NO KICK!!

Stylized grip

	Square Drive Inch	Torque Range FT-LB (Nm)	Max Torque FT-LB	Max Torque Nm	Free Speed R.P.M	Avg. Air Consumption CFM (L/min)	Air Pressure PSI (bar)	Overall Length Inch (mm)	Net Weight LBS	Net Weight kg	Air Hose Inch	Sound Pressure dBA	Vibration Level m/s²
NE-3901	3/8"	5-35(7-47)	40	54	1100	3 .1(88)	90(6.3)	6-1/4"(159)	1.32	0.6	3/8"	89.0	2.2
NE-4901	1/2"	10-40(13.5-54)	50	68	1100	3.0(85)	90(6.3)	6-1/4"(159)	1.48	0.67	3/8"	89.0	2.2
NE-3920	1/2"	5-37(7-50)	50	68	700	3.1(87)	90(6.3)	6.5"(164)	1.32	0.6	3/8"	88.0	1.85
NE-462	3/8"	10-55"(13.5-74)	74	100	200	4.0(113.28)	90(6.3)	13"(330)	4.1	1.88	3/8"	84.0	2.5
NE-462T	1/2"	10-65(13.5-88)	100	135.6	200	5.0(141)	90(6.3)	13-13/32"(340)	4.0	1.83	3/8"	85.0	2.2

Air Ratchet Wrench

Air inlet : 1/4"

NE-251R 1/4" DRIVE
NE-351R 3/8" DRIVE
NE-451R 1/2" DRIVE

Rubber Handle *20 pieces in one carton*

NE-251 / NE-351 / NE-451

1/4" & 1/2" DRIVE AIR RATCHET WRENCH

Air inlet : 1/4"

Exhaust

20 pieces in one carton

NE-352

3/8" DRIVE 2 in 1 AIR RATCHET WRENCH

Air inlet : 1/4"

Exhaust

20 pieces in one carton

NE-261 / NE-361

1/4" & 3/8" DRIVE AIR RATCHET WRENCH

Air inlet : 1/4"

Exhaust

20 pieces in one carton

NE-362 3/8" DRIVE 2 in 1 AIR RATCHET WRENCH

Air inlet : 1/4"

- back exhaust design to reduce flying dusts
- NE-361 with 3/8" square drive
- NE-362 with dual-use square drive
- 160mm long suitable for narrow space

Exhaust

20 pieces in one carton

	Square Drive Inch	Torque Range FT-LB (Nm)	Max Torque FT-LB	Max Torque Nm	Free Speed R.P.M	Avg. Air Consumption CFM (L/min)	Air Pressure PSI (bar)	Overall Length Inch (mm)	Net Weight LBS	Net Weight kg	Air Hose Inch	Sound Pressure dBA	Vibration Level m/s²
NE-251R	1/4"	5-15(6.7-20)	22	30	350	3.0(84.96)	90 (6.3)	5"(125)	1.1	0.50	3/8"	89.0	4.4
NE-351R	3/8"	5-15(6.7-20)	22	30	350	3.0(84.96)	90 (6.3)	5"(125)	1.1	0.50	3/8"	89.0	4.4
NE-451R	1/2"	5-20(6.7-27)	25	33.9	350	3.0(84.96)	90 (6.3)	5"(125)	1.1	0.50	3/8"	89.0	4.4
NE-251	1/4"	5-15(6.7-20)	22	30	350	3.0(84.96)	90 (6.3)	5"(125)	1.1	0.50	3/8"	89.0	4.4
NE-351	3/8"	5-15(6.7-20)	22	30	350	3.0(84.96)	90 (6.3)	5"(125)	1.1	0.50	3/8"	89.0	4.4
NE-451	1/2"	5-20(6.7-27)	25	33.9	350	3.0(84.96)	90 (6.3)	5"(125)	1.1	0.50	3/8"	89.0	4.4
NE-352	3/8"	5-15(6.7-20)	22	30	350	3.0(84.96)	90 (6.3)	5"(125)	1.1	0.50	3/8"	89.0	4.4
NE-261	1/4"	10-35(13.5-47)	37	50	230	4.0(130)	90 (6.3)	6-5/16"(160)	1.1	0.50	3/8"	88.0	3.0
NE-361	3/8"	10-35(13.5-47)	37	50	230	4.0(130)	90 (6.3)	6-6/16"(160)	1.1	0.50	3/8"	88.0	3.0
NE-362	3/8"	10-35(13.5-47)	37	50	230	4.6(130)	90 (6.3)	6-5/16"(160)	1.1	0.50	3/8"	88.0	3.0

AIR RATCHET WRENCH

NE-332/432

3/8" & 1/2" DRIVE AIR RATCHET WRENCH

Air inlet : 1/4"

- Quick release button enables fast and efficient socket change.
- Allows fast positioning on nut.
- Hardened gears, needle and ball bearings provide longer lifetime.
- Ultimate Torque: 60ft-lbs.

10 pieces in one carton

20% Longer Life-time

Compare With ordinary models

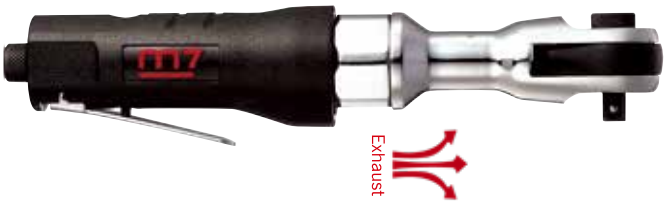

NE-488

1/2" DRIVE AIR RATCHET WRENCH

12 pieces in one carton

Air inlet : 1/4"

FEATURES

- Swivel Head. (up and down 30 degrees).
- Body TPR soft handle to reduce the sense of vibration.
- Exhaust hood all angle adjustable design.

NE-321 / NE-421

10 pieces in one carton

3/8" & 1/2" DRIVE AIR RATCHET WRENCH

Air inlet : 1/4"

NE-343 / NE-443

10 pieces in one carton

3/8" & 1/2" DRIVE AIR RATCHET WRENCH

Air inlet : 1/4"

	Square Drive Inch	Torque Range FT-LB (Nm)	Max Torque FT-LB	Max Torque Nm	Free Speed R.P.M	Avg. Air Consumption CFM (L/min)	Air Pressure PSI (bar)	Overall Length Inch (mm)	Net Weight LBS	Net Weight kg	Air Hose Inch	Sound Pressure dBA	Vibration Level m/s²
NE-332	3/8"	10-45(13.5-61)	60	81	160	4.0(113.28)	90 (6.3)	10-3/8"(265)	3.6	1.22	3/8"	90.5	4.4
NE-432	1/2"	10-45(13.5-61	60	81	160	4.0(113.28)	90 (6.3)	10-3/8"(265)	3.6	1.22	3/8"	89.8	5.2
NE-488	1/2"	10-40(13.5-54)	60	81	150	4.5(127.4)	90(6.3)	10-13/16"(275)	3.2	1.45	3/8"	85.0	3.9
NE-321	3/8"	10-35(13.5-47)	50	68	160	4.0(113.28)	90 (6.3)	10-3/8"(265)	2.3	1.04	3/8"	91.0	3.9
NE-421	1/2"	10-35(13.5-47)	50	68	160	4.0(113.28)	90 (6.3)	10-3/8"(265)	2.3	1.04	3/8"	92.8	4.6
NE-343	3/8"	10-55(13.5-74)	75	101.7	160	4.0(113.28)	90 (6.3)	11"(280)	2.8	1.30	3/8"	84.0	4.4
NE-443	1/2"	10-55(13.5-74)	100	135.6	160	4.0(113.28)	90 (6.3)	11"(280)	2.8	1.30	3/8"	84.0	4.4

NE-399/499

Jumbo Hammer Type
Air inlet : 1/4"

3/8"&1/2" DRIVE AIR ANGLE IMPACT WRENCH

8 pieces in one carton

- Max. torque 250ft-lb.
- Forward & reverse ring control.
- Composite rubber covered grip to increase holding feel.
- Jumbo-hammer mechanism.

NE-499N

1/2" DRIVE AIR ANGLE IMPACT WRENCH

Air inlet : 1/4"

8 pieces in one carton

- Air Angle Impact Wrench : 1pc (NE-499)
- Stubby impact sockets, 6 points :
- 9pcs 9, 10, 11, 13, 14, 17, 19, 22, 24 mm
- 1/4" plug : 1pc

NE-0413 [KIT]
NE-0413S [KIT]

1/2"

Thru-Hole Hex Socket Head **Thru-Hole Sockets13pcs**

Drive Air Ratchet Wrench

Air inlet : 1/4"

6 pieces in one carton

- 1pc Air Ratchet Wrench(NE-461)
- 8pcs 3/4" Hex Thru-hole socket :
- 8,9,10,12,13,14,17,19 mm (NE-0413)
- 8pcs 3/4" Hex Thru-hole socket :
  5/16",3/8",7/16",1/2",9/16",5/8",11/16",3/4" (NE-0413S)
- 1pc 3" Extension Bar
- 2pcs 1/2" 3/8" Adapter
- 1pc Plug

	Square Drive Inch	Bolt Capacity Inch (mm)	Torque Range FT-LB (Nm)	Max Torque FT-LB	Max Torque Nm	Free Speed R.P.M	Avg. Air Consumption CFM (L/min)	Air Pressure PSI (bar)	Overall Length Inch (mm)	Net Weight LBS	Net Weight kg	Air Hose Inch	Sound Pressure dBA	Vibration Level m/s²
NE-399	3/8"	9/16"(14)	50-130(68-176)	180	244	7500	2.45(69.4)	90(6.3)	13-3/8"(340)	4.0	1.83	3/8"	93.0	9.9
NE-499	1/2"	9/16"(14)	50-150(68-203)	250	339	7500	2.45(69.4)	90(6.3)	13-3/8"(340)	4.0	1.83	3/8"	93.0	9.9
NE-461	1/2"	9/16"(14)	10-65(13.5-88)	100	135	180	4.0(113)	90(6.3)	10-3/8"(270)	2.6	1.20	3/8"	83.0	2.3

NE-0405-KIT

1/2" DRIVE 5 IN 1 MULTIPLE TOOL KIT

Air inlet : 1/4"

60FT-LB / 81Nm

- 1pc NE-9004
- 1pc QA-9620
- 1pc QE-2132
- 1pc QA-9120
- 1pc QB-9903

Watchet NE-9004 1pc

Air drill QE-2132 1pc

Angle Grinder QB-9903

Die Grinder QA-9120

Angle Die Grinder QA-9620

5 pieces in one carton

	Cylinder Power	Chuck Capacity	Free Speed	Net Weight	Overall Length	Avg. Air Consumption	Air Pressure	Air Inlet Size	Air Hose	Sound Pressure
	hp(w)	Inch (mm)	R.P.M	kg	mm	(L/min)	PSI (bar)	Inch	Inch	dBA
QA-9120	0.5(372)	1/4" & 1/8" (6mm & 3mm)	20,000	0.73	202	5	90(6.3)	1/4"	3/8"	82
NE-9004	0.5(372)	1/2"(13)	150	1.488	287	5	90(6.3)	1/4"	3/8"	82
QE-2132	0.5(372)	3/8"(10)	2500	1.143	248	5	90(6.3)	1/4'	3/8"	82
QB-9903	0.5(372)	PAD DIA 3"(76)	14,000	0.976	211	5	90(6.3)	1/4"	3/8"	82
QA-9620	0.5(372)	1/4" & 1/8" (6mm & 3mm)	14,000	0.89	208	5	90(6.3)	1/4"	3/8"	82

REPAIR KIT

NE-399K01 **NE-499K01**	Anvil Ass'y	Hammer	Ratchet Anvil Ass'y	Planet Gear Ass'y	Rotor Blade	Gasket	O-Ring
	■	■			■	■	■
	Work Spindle	Needle Bearing	Ball Bearing	Muffler	Washer	Planet Pin	
	■						
NE-251K01 **NE-351K01**	Anvil Ass'y	Hammer	Ratchet Anvil Ass'y	Planet Gear Ass'y	Rotor Blade	Gasket	O-Ring
					■		
	Work Spindle	Needle Bearing	Ball Bearing	Muffler	Washer	Planet Pin	
				■	■		
NE-352K01	Anvil Ass'y	Hammer	Ratchet Anvil Ass'y	Planet Gear Ass'y	Rotor Blade	Gasket	O-Ring
					■		
	Work Spindle	Needle Bearing	Ball Bearing	Muffler	Washer	Planet Pin	
				■	■		
NE-321K01 **NE-421K01**	Anvil Ass'y	Hammer	Ratchet Anvil Ass'y	Planet Gear Ass'y	Rotor Blade	Gasket	O-Ring
			■	■	■		
	Work Spindle	Needle Bearing	Ball Bearing	Muffler	Washer	Planet Pin	
NE-332K01 **NE-432K01**	Anvil Ass'y	Hammer	Ratchet Anvil Ass'y	Planet Gear Ass'y	Rotor Blade	Gasket	O-Ring
			■	■	■		
	Work Spindle	Needle Bearing	Ball Bearing	Muffler	Washer	Planet Pin	
				■			
NE-343K01 **NE-443K01**	Anvil Ass'y	Hammer	Ratchet Anvil Ass'y	Planet Gear Ass'y	Rotor Blade	Gasket	O-Ring
				■	■		■
	Work Spindle	Needle Bearing	Ball Bearing	Muffler	Washer	Planet Pin	
			■			■	■
NE-461K01	Anvil Ass'y	Hammer	Ratchet Anvil Ass'y	Planet Gear Ass'y	Rotor Blade	Gasket	O-Ring
					■		■
	Work Spindle	Needle Bearing	Ball Bearing	Muffler	Washer	Planet Pin	
NE-483K01	Anvil Ass'y	Hammer	Ratchet Anvil Ass'y	Planet Gear Ass'y	Rotor Blade	Gasket	O-Ring
			■	■	■		
	Work Spindle	Needle Bearing	Ball Bearing	Muffler	Washer	Planet Pin	
NE-261K01 **NE-361K01**	Anvil Ass'y	Hammer	Ratchet Anvil Ass'y	Planet Gear Ass'y	Rotor Blade	Gasket	O-Ring
	■			■			
	Work Spindle	Needle Bearing	Ball Bearing	Muffler	Washer	Planet Pin	
NE-362K01	Anvil Ass'y	Hammer	Ratchet Anvil Ass'y	Planet Gear Ass'y	Rotor Blade	Gasket	O-Ring
	■			■	■		
	Work Spindle	Needle Bearing	Ball Bearing	Muffler	Washer	Planet Pin	

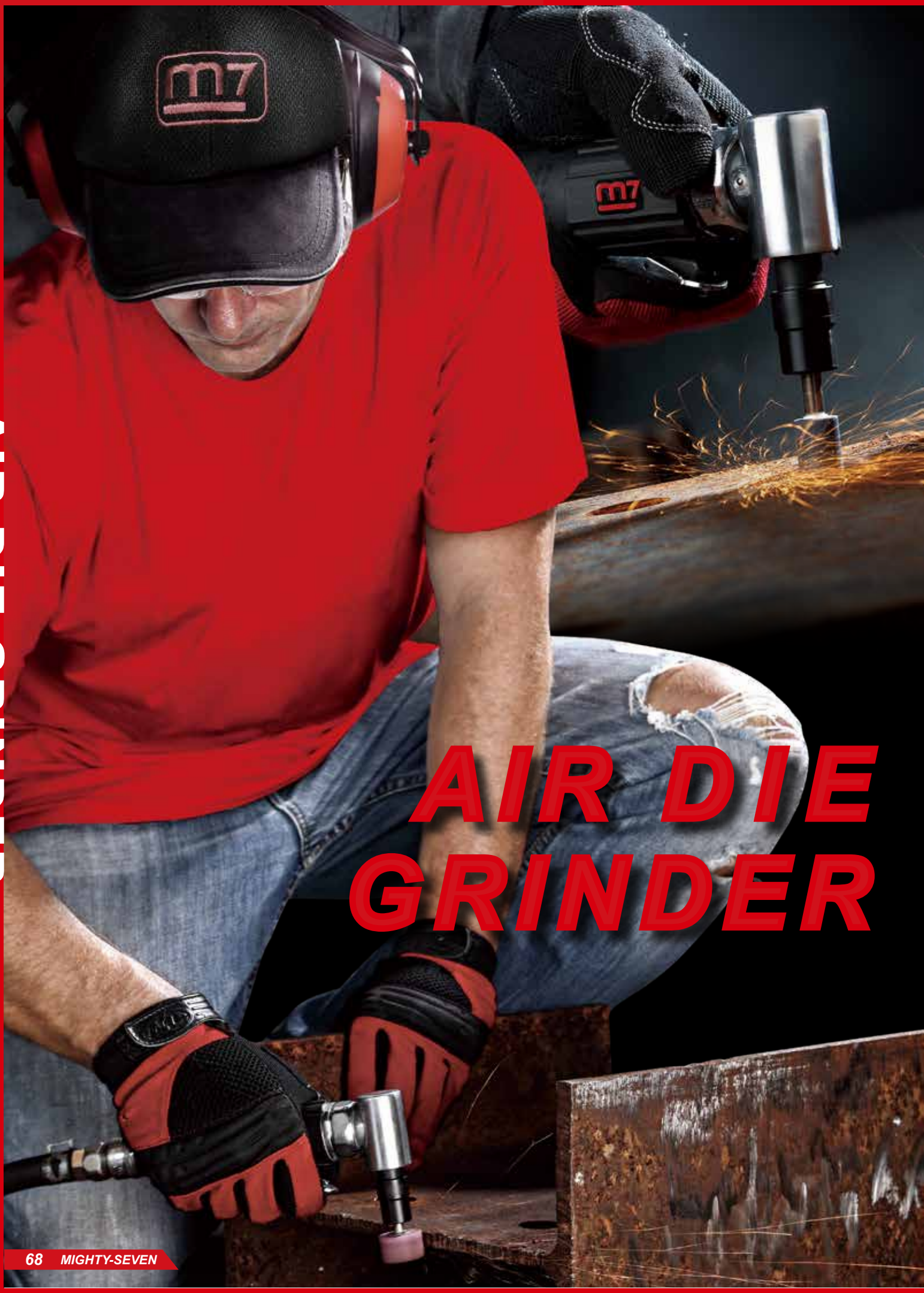

AIR DIE GRINDER

QA-1211 / QA-1221
QA-2211 / QA-2221

AIR DIE GRINDER **Safety Lever Type Throttle**

Air inlet : 1/4"

QA-1211 / QA-1221

QA-2211 / QA-2221

20 pieces in one carton

- 3mm & 6mm clip collet type
- composite housing / light weight & comfort
- Low dBA also Low Vibration

Industrial Grade collet for precise concentricity

QA-633Q A/B

97º Air Angle Die Grinder

Air inlet : 1/4"

- No gear type to reduce maintenance costs
- 97 degree angle to reduce wrist fatigue
- Low sound pressure 75dBA
- Composite grip / long time usage without cold feeling
- Enlarged motor design for bigger power output

64% Lower Sound

50% longer Life-time

Compare With ordinary models

20 pieces in one carton

	Collet Size A mm	Collet Size B inch	Free Speed R.P.M	Avg. Air Consumption CFM (L/min)	Air Pressure PSI (bar)	Overall Length Inch (mm)	Motor HP	Net Weight LBS(kg)		Air Hose Inch	Sound Pressure dBA	Vibration Level m/s²
QA-1211	3	1/8"	25000	14	90 (6.3)	7-11/16"(196)	0.4	1.1	0.49	3/8"	68	0.9
QA-1221	6	1/4"	25000	14	90 (6.3)	7-11/16"(196)	0.4	1.1	0.49	3/8"	68	0.9
QA-2211	3	1/8"	20000	14	90 (6.3)	8-7/16"(215)	0.6	1.6	0.71	3/8"	75	0.9
QA-2221	6	1/4"	20000	14	90 (6.3)	8-7/16"(215)	0.6	1.6	0.71	3/8"	75	0.9
QA-633Q	6 & 3	1/4" & 1/8"	15000	17.2(490)	90(6.3)	7-1/8"(180)	0.6	1.54	0.70	3/8"	78	>2.5

AIR DIE GRINDER

QA-131 A / B

AIR DIE GRINDER
Roll Type Throttle

Air inlet : 1/4"

20 pieces in one carton

QA-141 A / B
QA-141L A / B

AIR DIE GRINDER Air inlet : 1/4"

QA-141-Roll Type Throttle
QA-141L-Lever Type Throttle

80% Longer Life-time

70% More Powerful

20 pieces in one carton

- 6mm clip collet / overall type
- steel overall housing / high strength
- Front exhaust design

QA-151 A / B

AIR DIE GRINDER
Roll Type Throttle

Air inlet : 1/4"

20 pieces in one carton

QA-681 A/B

AIR ANGLE DIE GRINDER Air inlet : 1/4"

10 pieces in one carton

- Spindle lock design.
- Grease hole
- 0.5 hp motor

QA-143 A / B

Air inlet : 1/4"

12 pieces in one carton

AIR DIE GRINDER
Roll Type Throttle

QA-163 A / B
QA-163L A / B

AIR DIE GRINDER
Air inlet : 3/8"

QA-163-Roll Type Throttle
QA-163L-Lever Type Throttle

12 pieces in one carton

QA-1710A/B

EXTENDED AIR DIE GRINDER

Air inlet : 1/4"

10 pieces in one carton

FEATURES

- Grinder can be used in a wide range of grinding and polishing applications.
- Easy operation at the corner or deep place.

Exhaust

QA-632Q A / B

97°AIR ANGLE DIE GRINDER Air inlet : 1/4"

- No gear type to reduce maintenance costs
- 97 degree angle to reduce wrist fatigue
- Low sound pressure 75dAB Composite grip / long time usage
- without cold feeling

20 pieces in one carton

Exhaust

QA-611 A / B

90°AIR ANGLE DIE GRINDER Air inlet : 1/4"

- 90° working angle provides wide flexibility in confined areas.
- Both 3mm and 6mm or 1/8" and 1/4" collets are included.

20 pieces in one carton

Exhaust

	Collet Size A mm	Collet Size B inch	Free Speed R.P.M	Avg. Air Consumption CFM (L/min)	Air Pressure PSI (bar)	Overall Length Inch (mm)	Motor HP	Net Weight LBS(kg)		Air Hose Inch	Sound Pressure dBA	Vibration Level m/s²
QA-131	3	1/8"	30000	14.0(396)	90(6.3)	6-11/16"(170)	0.4	1.3	0.60	3/8"	75.0	2.5
QA-681	6 & 3	1/4" & 1/8"	20000	5.0(141)	90(6.3)	7-11/16" (195)	0.5	1.76	0.8	3/8"	85.0	1.8
QA-141	6	1/4"	24000	14.0(396)	90(6.3)	6-11/16"(170)	0.4	1.3	0.60	3/8"	75.0	2.5
QA-141L	6	1/4"	24000	14.0(396)	90(6.3)	6-11/16"(170)	0.4	1.3	0.60	3/8"	75.0	2.5
QA-143	6	1/4"	24000	14.0(396)	90(6.3)	11-11/16"(296)	0.4	2.0	0.90	3/8"	75.0	2.5
QA-151	6	1/4"	18000	12.2(345)	90(6.3)	7"(177)	0.9	1.76	0.80	3/8"	75.0	2.1
QA-163	6	1/4"	16000	5.0(141)	90(6.3)	12"(305)	0.9	2.7	1.25	3/8"	90.0	2.8
QA-163L	6	1/4"	16000	5.0(141)	90(6.3)	13-25/32"(350)	0.9	2.9	1.31	3/8"	90.0	2.8
QA-1710	6	1/4"	18000	5.0(141)	90(6.3)	18-5/16"(465)	0.4	2.36	1.07	3/8"	80.0	1.5
QA-632Q	6 & 3	1/4" & 1/8"	22000	12.3(350)	90(6.3)	7"(177)	0.4	1.12	0.51	3/8"	75.0	>2.5
QA-611	6 & 3	1/4" & 1/8"	19000	10.0(283)	90(6.3)	6-1/8"(160)	0.3	1.12	0.51	3/8"	74.4	1.7

AIR DIE GRINDER

QA-110 A / B

AIR DIE GRINDER Air inlet : 1/4"

20 pieces in one carton

Stylized grip

QA-101 A / B

AIR DIE GRINDER Air inlet : 1/4"

- Grinder can be used in a wide range of grinding and polishing applications.
- Easy operation at the corner or deep place.

20 pieces in one carton

QA-111 A / B

AIR DIE GRINDER Air inlet : 1/4"

20 pieces in one carton

QA-210 A / B

AIR DIE GRINDER Air inlet : 1/4"

20 pieces in one carton

Keyless Collet

QA-211 A / B

AIR DIE GRINDER Air inlet : 1/4"

20 pieces in one carton

QA-231Q A / B

AIR DIE GRINDER Air inlet : 1/4"

20 pieces in one carton

QA-241 A / B

AIR DIE GRINDER Air inlet : 1/4"

20 pieces in one carton

QA-311 A / B

AIR DIE GRINDER

Air inlet : 1/4"

10 pieces in one carton

QA-313 A / B

AIR DIE GRINDER

Air inlet : 1/4"

10 pieces in one carton

QA-315 A / B

AIR DIE GRINDER

Air inlet : 1/4"

10 pieces in one carton

QA-116 A/B

AIR DIE GRINDER

Air inlet : 1/4"

10 pieces in one carton

	Collet Size A mm	Collet Size B inch	Free Speed R.P.M	Avg. Air Consumption CFM (L/min)	Air Pressure PSI (bar)	Overall Length Inch (mm)	Motor HP	Net Weight LBS(kg)		Air Hose Inch	Sound Pressure dBA	Vibration Level m/s²
QA-110	6 & 3	1/4" & 1/8"	22000	5.0(141)	90 (6.3)	7-5/16"(186)	0.5	1.36	0.62	3/8"	85.0	1.1
QA-101	6 & 3	1/4" & 1/8"	25000	6.3(178)	90(6.3)	4-11/16"(119)	0.3	0.71	0.32	3/8"	80.0	1.4
QA-111	6 & 3	1/4" & 1/8"	25000	10.0(283)	90(6.3)	6"(155)	0.3	0.8	0.38	3/8"	81.5	1.8
QA-210	6	1/4"	20000	10.0(283)	90(6.3)	7-1/2"(190)	0.9	1.4	0.65	3/8"	75.7	0.8
QA-211	6 & 3	1/4" & 1/8"	20000	10.0(283)	90(6.3)	7-1/2"(190)	0.9	1.4	0.65	3/8"	75.7	0.8
QA-231Q	6 & 3	1/4" & 1/8"	20000	14.8(420)	90(6.3)	5-29/32"(150)	0.45	0.8	0.35	3/8"	80.0	>2.5
QA-241	6	1/4"	4000	10.6(283)	90(6.3)	8-5/8"(220)	0.5	1.6	0.75	3/8"	75.0	0.87
QA-311	6 & 3	1/4" & 1/8"	25000	10.0(283)	90(6.3)	7-1/2"(190)	0.3	1.0	0.48	3/8"	81.5	1.8
QA-313	6 & 3	1/4" & 1/8"	25000	10.0(283)	90(6.3)	9-1/4"(235)	0.3	1.2	0.58	3/8"	81.5	1.8
QA-315	6 & 3	1/4" & 1/8"	25000	10.0(283)	90(6.3)	11"(280)	0.3	1.4	0.63	3/8"	81.5	1.8
QA-116	6 & 3	1/4" & 1/8"	22000	5.0(141)	90 (6.3)	13-9/16"(345)	0.5	2.53	1.15	3/8"	85.0	1.8

AIR DIE GRINDER

QA-0115 A / B
QA-0215 A / B

AIR DIE GRINDER 15PCS KIT

Air inlet : 1/4"

10 pieces in one carton

- 1pc Air Die Grinder (QA-111 / 211)
- 1pc Collet (3 mm or 1/8")
- 2pcs Spanner Wrench
- 5pcs Grinding Stone (3 mm or 1/8")
- 5pcs Grinding Stone (6mm or 1/4")
- 1pc Plug (adapter)

QA-0615 A / B

AIR DIE GRINDER 15PCS KIT

Air inlet : 1/4"

10 pieces in one carton

- 1pc Air Die Grinder (QA-611)
- 1pc Collet (3 mm or 1/8")
- 2pcs Spanner Wrench
- 5pcs Grinder Stone (3 mm or 1/8")
- 5pcs Grinder Stone (6 mm or 1/4")
- 1pc Plug (adapter)

QA-0207 A / B

AIR DIE GRINDER 7PCS KIT

Air inlet : 1/4"

10 pieces in one carton

- 1pc Air Die Grinder (QA-210)
- 5pcs Grinder stone (6mm or 1/4")
- 1pc Plug (adapter)

QA-4507

A:6mm B:1/4"

MICRO AIR DIE GRINDER

Air inlet : 1/4"

10 pieces in one carton

QA-412

20 pieces in one carton

A:3mm B:1/8"

MICRO AIR DIE GRINDER

Air inlet : 1/4"

QA-421

20 pieces in one carton

A:3mm B:1/8"

MICRO AIR DIE GRINDER

Air inlet : 1/4"

QA-431

10 pieces in one carton

A:3mm B:1/8"

MICRO AIR DIE GRINDER

Air inlet : 1/4"

QA-432

20 pieces in one carton

A:3mm B:1/8"

MICRO AIR DIE GRINDER

Air inlet : 1/4"

QA-511

20 pieces in one carton

ENGRAVING PEN

Air inlet : 1/4"

QA-441

20 pieces in one carton

HEAVY DUTY MICRO AIR DIE GRINDER A:3mm B:1/8"

Air inlet : 1/4"

- Heavy Duty 3mm Pencil Grinder
- Rust-free stainless steel front housing
- Ideal for machining dies, molds or other restricted grinding applications

	Collet Size inch(mm)	Free Speed R.P.M	Blow Per Minute bpm	Avg. Air Consumption CFM (L/min)	Air Pressure PSI (bar)	Overall Length Inch (mm)	Hose Length mm	Net Weight LBS(kg)		Air Hose Inch	Sound Pressure dBA	Vibration Level m/s²
QA-4507	1/4"(6)	32000	-----	4.0(113)	90(6.3)	14-11/32"(364)	1500	0.88	0.40	3/8"	85.0	1.2
QA-412	1/8" (3)	60000	-----	2.7(76)	90(6.3)	6-3/4"(170)	1500	0.50	0.22	3/8"	70.0	0.5
QA-421	1/8" (3)	60000	-----	2.7(76)	90(6.3)	6"(150)	1500	0.50	0.22	3/8"	70.0	0.5
QA-431	1/8" (3)	54000	-----	2.0(56)	90(6.3)	5-3/8"(137)	1425	0.40	0.18	3/8"	70.0	0.5
QA-432	1/8" (3)	70000	-----	1.0(29)	90(6.3)	5-3/8"(137)	1425	0.40	0.18	3/8"	70.0	0.5
QA-511	-----	-----	13000	1.0(29)	90(6.3)	5-1/2"(140)	1420	0.50	0.22	3/8"	78.0	0.6
QA-441	1/8"(3)	60000	-----	2.0(56)	90(6.3)	5-5/16"(135)	1500	0.40	0.18	3/8"	71.0	1.0

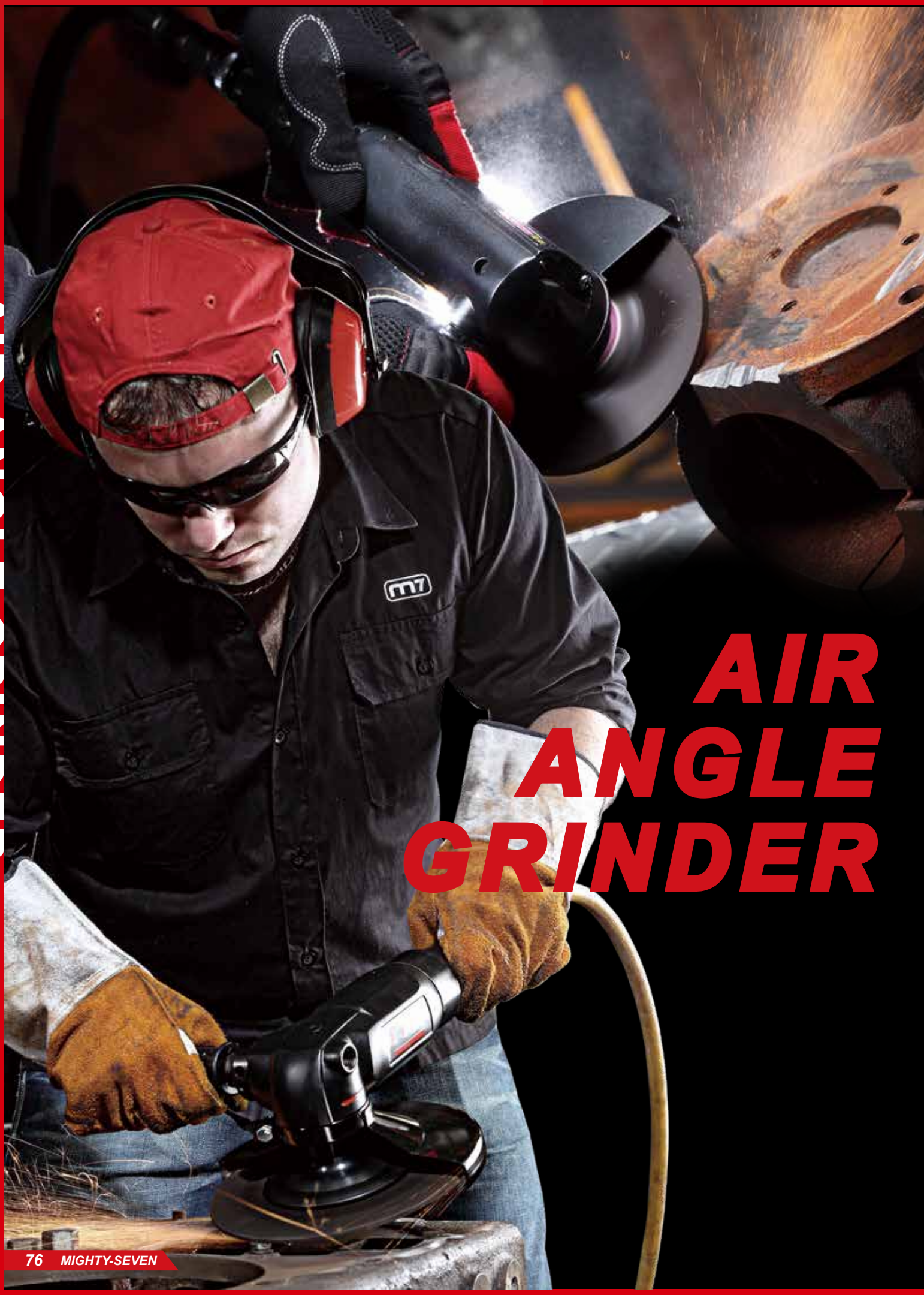

AIR ANGLE GRINDER

QB-7315 M / S

2.3hp Air Angle Grinder / Lever Type Throttle

Air inlet : 1/4"

6 pieces in one carton

Note : The grinding wheel is not supplied along with the tool

300°
Adjustable Wheel Guard

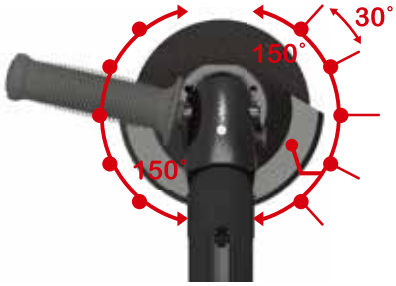

FEATURES

- 2.3 HP governed motor provides constant speed and unstoppable stall-less operation.
- Superior torque for maximal productivity.
- Ergonomically designed composite grip, vibration damped, side handle and throttle trigger provide unmatched comfort to the user.

Air Intake Plenum

Internal Governor

	Pad Dia inch(mm)	Spindle Size	Free Speed R.P.M	Avg. Air Consumption CFM (L/min)	Air Pressure PSI (bar)	Overall Length Inch (mm)	Motor HP	Net Weight LBS(kg)		Air Hose Inch	Sound Pressure dBA	Vibration Level m/s²
QB-7315M	5"	M14*P2.0	10000	6.9(195)	90(6.3)	9-1/4"(234)	2.3	4.0	1.8	1/2"	88	3.8
QB-7315S	127	5/8"-11	10000	6.9(195)	90(6.3)	9-1/4"(234)	2.3	4.0	1.8	1/2"	88	3.8

QB-7114 S/M
QB-7145 S/M
QB-7115 S/M

100º AIR ANGLE GRINDER / LEVER TYPE THROTTLE

Air inlet : 1/4"

20% More Powerful

Compare With ordinary models

6 pieces in one carton

Note : The grinding wheel is not supplied along with the tool

Repair kit

Bevel Gear	Rotor Blades	Packing	Key

- Strengthened motor design can reach 1.3HP.
- Metric and inch spindle design can meet accessory demands in every market.
- Spindle lock enables easier accessory changes.
- 100 degree design enables easier operation.
- Heavy duty air cooled spiral gears and double bearings for durability.
- 360° Swivel Wheel Guard.

	Pad Dia inch(mm)	Spindle Size	Free Speed R.P.M	Avg. Air Consumption CFM (L/min)	Air Pressure PSI (bar)	Overall Length Inch (mm)	Motor HP	Net Weight LBS(kg)		Air Hose Inch	Sound Pressure dBA	Vibration Level m/s²
QB-7114(S/M)	4"(100)	3/8"-24 / M10*P1.5	11000	4.2(119)	90(6.3)	9-1/8"(232)	1.30	4.0	1.81	3/8"	90.0	1.2
QB-7145(S/M)	4-1/2"(114)	5/8"-11 / M14*P2.0	11000	4.2(119)	90(6.3)	9-1/8"(232)	1.30	4.0	1.81	3/8"	90.0	1.2
QB-7115(S/M)	5"(125)	5/8"-11 / M14*P2.0	11000	4.2(119)	90(6.3)	9-1/8"(232)	1.30	4.0	1.81	3/8"	90.0	1.2

QB-194

AIR ANGLE GRINDER / ROLL TYPE THROTTLE

Air inlet : 3/8"

10 pieces in one carton

Note : The grinding wheel is not supplied along with the tool

QB-194L

AIR ANGLE GRINDER / LEVER TYPE THROTTLE

Air inlet : 3/8"

6 pieces in one carton

Note : The grinding wheel is not supplied along with the tool

QB-192L Safety Lever Type Throttle

QB-192 Roll Type Throttle

Air inlet : 1/4"

AIR ANGLE GRINDER

10 pieces in one carton

Note : The grinding wheel is not supplied along with the tool

QB-193L Safety Lever Type Throttle

QB-193 Roll Type Throttle

Air inlet : 1/4"

AIR ANGLE GRINDER

10 pieces in one carton

Note : The grinding wheel is not supplied along with the tool

	Pad Dia / Arbor Size inch(mm)	Spindle Size	Free Speed R.P.M	Avg. Air Consumption CFM (L/min)	Air Pressure PSI (bar)	Overall Length Inch (mm)	Motor HP	Net Weight LBS(kg)		Air Hose Inch	Sound Pressure dBA	Vibration Level m/s²
QB-194	4"(100x16)	M8 X 1.25	12000	4.9(138)	90(6.3)	8-15/32"(215)	0.9	4.2	1.9	3/8"	91.0	2.6
QB-194L	4"(100x16)	M8 X 1.25	12000	4.9(138)	90(6.3)	10-23/32"(272)	0.9	4.6	2.1	3/8"	89.0	2.5
QB-192	2"(50)	1/4"-28	15000	5.3(150)	90 (6.3)	6-1/8"(154)	0.36	1.3	0.6	3/8"	81	2
QB-193	3"(75)	M8	13500	5.8(164)	90 (6.3)	7-1/8"(180)	0.44	2.4	1.1	3/8"	85	2.5

QB-104/105

AIR ANGLE GRINDER / ROLL TYPE THROTTLE

Air inlet : 1/4"

10 pieces in one carton

Note : The grinding wheel is not supplied along with the tool

QB-114/115

AIR ANGLE GRINDER / ROLL TYPE THROTTLE

Air inlet : 1/4"

10 pieces in one carton

Note : The grinding wheel is not supplied along with the tool

Repair kit

1. O-ring
2. Whirl Spindle Washer
3. Driving Gear
4. Driven Gear
5. Bearing
6. Flat Ring
7. Rotor Blades

QB-124/125

AIR ANGLE GRINDER / ROLL TYPE THROTTLE

Air inlet : 1/4"

10 pieces in one carton

Note : The grinding wheel is not supplied along with the tool

QB-134/135
QB-154/155

AIR ANGLE GRINDER / ROLL TYPE THROTTLE

Air inlet : 1/4"

10 pieces in one carton

Note : The grinding wheel is not supplied along with the tool

QB-144/145
QB-164/165

Repair kit

1. BallBearing
2. O-Ring
3. 4" Grinding Wheel (QB-144)
4. Bevel Gear Ass'y
5. Rotor Blades (QB-144 / QB-164)
6. Ball Bearing

AIR ANGLE GRINDER / ROLL TYPE THROTTLE

Air inlet : 1/4"

10 pieces in one carton

Note : The grinding wheel is not supplied along with the tool

QB-107

Air Angle Grinder / ROLL TYPE THROTTLE

Air inlet : 3/8"

6 pieces in one carton

Note : The grinding wheel is not supplied along with the tool

QB-117

AIR ANGLE GRINDER / ROLL TYPE THROTTLE

Air inlet : 3/8"

6 pieces in one carton

Note : The grinding wheel is not supplied along with the tool

QB-177

AIR ANGLE GRINDER / ROLL TYPE THROTTLE

Air inlet : 3/8"

6 pieces in one carton

Note : The grinding wheel is not supplied along with the tool

Repair kit

1. O-ring
2. Whirl Spindle Washer
3. Driving Gear
4. Driven Gear
5. Bearing
6. Flat ring
7. Rotor Blades

	Pad Dia / Arbor Size inch(mm)	Spindle Size	Free Speed R.P.M	Avg. Air Consumption CFM (L/min)	Air Pressure PSI (bar)	Overall Length Inch (mm)	Motor HP	Net Weight LBS(kg)		Air Hose Inch	Sound Pressure dBA	Vibration Level m/s²
QB-104	4"(100x16)	3/8"-24	11000	6.0(170)	90(6.3)	8-7/8"(226)	0.78	4.0	1.81	3/8"	87.8	1.2
QB-105	5"(125x22)	3/8"-24	11000	6.0(170)	90(6.3)	8-7/8"(226)	0.78	4.0	1.81	3/8"	87.1	1.2
QB-114	4"(100x16)	3/8"-24	11000	6.0(170)	90(6.3)	9"(230)	0.78	4.0	1.81	3/8"	87.8	1.2
QB-115	5"(125x22)	3/8"-24	11000	6.0(170)	90(6.3)	9"(230)	0.78	4.0	1.81	3/8"	87.1	1.2
QB-124	4"(100x16)	3/8"-24	11000	6.0(170)	90(6.3)	9"(230)	0.80	3.8	1.73	3/8"	85.7	3.0
QB-125	5"(125x22)	5/8"-11	11000	6.0(170)	90(6.3)	9"(230)	0.80	3.9	1.78	3/8"	87.0	5.9
QB-134	4"(100x16)	M10xP1.5	11000	6.0(170)	90(6.3)	9"(230)	0.78	4.0	1.81	3/8"	87.8	1.2
QB-135	5"(125x22)	M14xP2.0	11000	6.0(170)	90(6.3)	9"(230)	0.78	4.0	1.81	3/8"	87.1	1.2
QB-144	4"(100x16)	M10xP1.5	11000	6.0(170)	90(6.3)	8-7/8"(226)	0.78	4.0	1.81	3/8"	87.8	1.2
QB-145	5"(125x22)	M14xP2.0	11000	6.0(170)	90(6.3)	8-7/8"(226)	0.78	4.0	1.81	3/8"	87.8	1.2
QB-154	4"(100x16)	3/8"-24	11000	6.0(170)	90(6.3)	9"(230)	0.78	3.8	1.73	3/8"	87.8	1.2
QB-155	5"(125x22)	3/8"-24	11000	6.0(170)	90(6.3)	9"(230)	0.78	3.9	1.78	3/8"	87.8	1.2
QB-164	4"(100x16)	3/8"-24	11000	6.0(170)	90(6.3)	8-7/8"(226)	0.78	4.0	1.81	3/8"	87.8	1.2
QB-165	5"(125x22)	3/8"-24	11000	6.0(170)	90(6.3)	8-7/8"(226)	0.78	4.0	1.81	3/8"	87.8	1.2
QB-107	7"(178x22)	------	7000	9.0(255)	90(6.3)	11-1/4"(290)	1.0	7.1	3.02	1/2"	89.7	1.0
QB-117	7"(178x22)	------	7000	9.0(255)	90(6.3)	13-1/2"(343)	1.0	7.1	3.22	1/2"	89.7	1.0
QB-177	7"(178x22)	5/8"-11	7600	6.0(170)	90(6.3)	11-13/16"(300)	2.0	7.2	3.3	3/8"	92.0	2.7

QB-197Q

AIR ANGLE GRINDER / LEVER TYPE THROTTLE

Air inlet : 3/8"

Repair kit

1. Muffler Pad
2. Bevel Pinion
3. Bevel Gear
4. Rotor Blades

6 pieces in one carton

Note : The grinding wheel is not supplied along with the tool

QB-179

AIR VERTICAL GRINDER / LEVER TYPE THROTTLE

Air inlet : 1/2"

Repair kit

1. Packing
2. Bearing
3. O-Ring

4 pieces in one carton

Note : The grinding wheel is not supplied along with the tool

QB-185

AIR VERTICAL GRINDER / LEVER TYPE THROTTLE

Air inlet : 3/8"

4 pieces in one carton

Note : The grinding wheel is not supplied along with the tool

QB-187

AIR VERTICAL GRINDER / LEVER TYPE THROTTLE

Air inlet : 3/8"

4 pieces in one carton

Note : The grinding wheel is not supplied along with the tool

QB-194-CN

AIR ANGLE GRINDER / ROLL TYPE THROTTLE

Air inlet : 3/8"

9 pieces in one carton

Note : The grinding wheel is not supplied along with the tool

QB-195-85
QB-195-120

AIR ANGLE GRINDER / ROLL TYPE THROTTLE

Air inlet : 3/8"

10 pieces in one carton

Note : The grinding wheel is not supplied along with the tool

	Pad Dia / Arbor Size inch(mm)	Spindle Size	Free Speed R.P.M	Avg. Air Consumption CFM (L/min)	Air Pressure PSI (bar)	Overall Length Inch (mm)	Motor HP	Net Weight LBS(kg)		Air Hose Inch	Sound Pressure dBA	Vibration Level m/s²
QB-197Q	7"(178x22)	5/8"-11	7000	6.0(170)	90(6.3)	13-15/16"(353)	2.2	6.8	3.1	3/8"	77.0	2.4
QB-179	9"(230x22)	5/8"-11	6000	7.0(198)	90(6.3)	11"(279)	3.8	13.2	6.0	3/4"	86.0	2.1
QB-185	5"(125x22)	5/8"-11	12000	6.0(170)	90(6.3)	9-9/64"(232)	1.4	6.2	2.8	1/2"	86.0	2.1
QB-187	7"(178x22)	5/8"-11	7000	6.0(170)	90(6.3)	9-23/32"(247)	2.0	8.8	4.0	1/2"	86.0	2.1
QB-194-CN	4"(100x16)	M8 X 1.25	13500	4.8(136)	90(6.3)	8-15/64"(210)	0.8	4.2	1.9	3/8"	92.0	2.8
QB-195-85	5"(125x22)	1/2"-13	8500	4.9(138)	90(6.3)	8-15/16"(227)	1.4	5.3	2.4	3/8"	91.0	2.1
QB-195-120	5"(125x22)	1/2"-13	12000	5.1(144)	90(6.3)	10-13/16"(275)	1.4	5.5	2.5	3/8"	91.0	2.1

QB-195L-85
QB-195L-120

AIR ANGLE GRINDER / LEVER TYPE THROTTLE
Air inlet : 3/8"

6 pieces in one carton

Note : The grinding wheel is not supplied along with the tool

QB-195-CN

AIR ANGLE GRINDER / ROLL TYPE THROTTLE
Air inlet : 3/8"

9 pieces in one carton

Note : The grinding wheel is not supplied along with the tool

QB-199 S/M

AIR ANGLE GRINDER / LEVER TYPE THROTTLE
Air inlet : 3/8"

4 pieces in one carton

Note : The grinding wheel is not supplied along with the tool

QB-1004

AIR ANGLE GRINDER / ROLL TYPE THROTTLE
Air inlet : 1/4"

6 pieces in one carton

Note : The grinding wheel is not supplied along with the tool

Used With Straight Grinding Wheel

QB-2925

AIR STRAIGHT GRINDER / ROLL TYPE THROTTLE

Air inlet : 3/8"

12 pieces in one carton

Note : The grinding wheel is not supplied along with the tool

Used With Straight Grinding Wheel

QB-2925L

AIR STRAIGHT GRINDER / LEVER TYPE THROTTLE

Air inlet : 3/8"

12 pieces in one carton

Note : The grinding wheel is not supplied along with the tool

QB-623

2"AIR ANGLE GRINDER / Lever Type Throttle

Air inlet : 1/4"

10 pieces in one carton

- Back exhaust design to reduce flying dusts
- Suitable sizes for detailed sanding and trimming

	Pad Dia / Arbor Size inch(mm)	Spindle Size	Free Speed R.P.M	Avg. Air Consumption CFM (L/min)	Air Pressure PSI (bar)	Overall Length Inch (mm)	Motor HP	Net Weight LBS(kg)		Air Hose Inch	Sound Pressure dBA	Vibration Level m/s²
QB-195L-85	5"(125x22)	1/2"-13	8500	4.9(138)	90(6.3)	10-13/16"(275)	1.4	5.5	2.5	3/8"	91.0	2.1
QB-195L-120	5"(125x22)	1/2"-13	12000	5.1(144)	90(6.3)	10-13/16"(275)	1.4	5.5	2.5	3/8"	91.0	2.1
QB-195-CN	5"(125x22)	M8 X 1.25	12000	4.9(138)	90(6.3)	8-15/32"(215)	1.0	4.4	2.0	3/8"	91.0	2.6
QB-199S	9"(230x22)	5/8"	5900	6.8(178)	90(6.3)	14"(360)	2.5	9.9	4.5	3/8"	98.0	3.75
QB-199M	9"(230x22)	M14 X P2.0	5900	6.8(178)	90(6.3)	14"(360)	2.5	9.9	4.5	3/8"	98.0	3.75
QB-1004	4" (100x16)	M8 X 1.25	13500	4.9(138)	90(6.3)	7-3/32"(215)	0.6	2.6	1.2	3/8"	85.0	2.5
QB-2925	(65x13x9.5)	M10 X 1.5	16000	5.0(141)	90(6.3)	10-11/16"(270)	0.9	2.9	1.33	3/8"	90.0	2.8
QB-2925L	(65x13x9.5)	M10 X 1.5	16000	5.0(141)	90(6.3)	12-25/32"(324)	0.9	3.0	1.39	3/8"	90.0	2.8
QB-623	2"(50x10)	M14 X P2.0	19000	8.1(283)	90(6.3)	6-5/16"(160)	0.3	1.2	0.57	3/8"	80.0	0.5

AIR BELT SANDER

QB-311

AIR BELT SANDER
Air inlet : 1/4"

10 pieces in one carton

- 10mm belt-can be easily changed.
- Belt automatically adjusts to correct position.
- Belt shroud protects hands.
- Rubber handle offers non-slip grip and insulates hands from cold housing.
- Common applications include sanding and smoothing of welds, paint, rust and deburring removal.

QB-312

AIR BELT SANDER
Air inlet : 1/4"

10 pieces in one carton

- Common applications include sanding and smoothing of welds, paint, rust and deburring removal in difficult-to-access locations

Repair kit

1. 20x520mm Belt #100
2. 20x520mm Belt #80
3. Idler Ass'y
3. Rotor Blades

QB-313

AIR BELT SANDER
Air inlet : 1/4"

6 pieces in one carton

QB-321

AIR BELT SANDER
Air inlet : 1/4"

10 pieces in one carton

QB-324

AIR BELT SANDER
Air inlet : 1/4"

10 pieces in one carton

- Adjustable belt speed control regulator
- Common applications include sanding and smoothing of welds, paint, rust and deburring removal in difficult-to-access locations

QB-322
QB-322C

AIR BELT SANDER

Air inlet : 1/4"

10 pieces in one carton

- Ergonomic grip with streamline plastic cover
- Air adjusting switch for adjusting speed
- No screw type -> 360 degree open shield, easy to change sanding belts

QB-322RC

AIR BELT SANDER - ANGLE FELXIBLE

Air inlet : 1/4"

10 pieces in one carton

- Can be bent to 0~50 degrees
- 5-stage speed regulation 10000~16000R.P.M can be adjusted according to grinding conditions
- <Rubber Pulley> equipped with single point operation grinding
  Bending design for large diameter metal tubes with iron bars or large curved surfaces

QB-325N[SET]

AIR BELT SANDER

Air inlet : 1/4"

4 pieces in one carton

- Adjustable belt speed control regulator.
- Non-woven abrasive belt available.
- Ergonomic design for comfortable operation.

Belt Size

- 10x330mm / 3/8"x13"
- 6x330mm / 1/4"x13"
- 20x330mm / 3/4"x13"
- 20x520mm / 3/4"x20-1/2"

	Belt Size / Pad Dia inch(mm)	Free Speed R.P.M	Avg. Air Consumption CFM (L/min)	Air Pressure PSI (bar)	Overall Length Inch (mm)	Net Weight LBS	Net Weight kg	Air Hose Inch	Sound Pressure dBA	Vibration Level m/s²
QB-311	3/8"x13"(10x330)	16000	8.0(226)	90(6.3)	11-1/2"(290)	1.76	0.80	3/8"	89.7	0.5
QB-312	3/4"x20-1/2"(20x520)	16000	9.0(254)	90(6.3)	14"(360)	2.65	1.20	3/8"	91.8	0.4
QB-313	1-3/16"x21-1/4"(30x540)	13000	10.0(283)	90(6.3)	15-3/8"(390)	5.28	2.40	3/8"	81.0	1.2
QB-321	3/8"x13"(10x330)	16000	4.0(113)	90(6.3)	12-5/8"(320)	2.1	0.95	3/8"	88.0	1.0
QB-322	3/4"x20-1/2"(20x520)	16000	4.0(113)	90(6.3)	17"(430)	3.1	1.40	3/8"	88.0	1.3
QB-322RC	3/4"x20"-1/2"(20x520)	16000	4.0(113)	90(6.3)	17"(430)	3.1	1.40	3/8"	88.0	1.3
QB-324	1/2"x24"(12.7x610)	16000	4.0(113)	90(6.3)	18"(455)	2.4	1.10	3/8"	88.0	1.1
QB-325	3/8"x13" (10X330)	16000	4.0(113)	90(6.3)	12-5/8"(320)	2.1	0.95	3/8"	90	1.1
	[QB-325P04]									
	1/4"x13" (6X330)									
	[QB-325P52]									
	3/4"x13" (20X330)									
	[QB-325P53]									
	3/4"x20-1/2" (20X520)									
	[QB-325P54]									

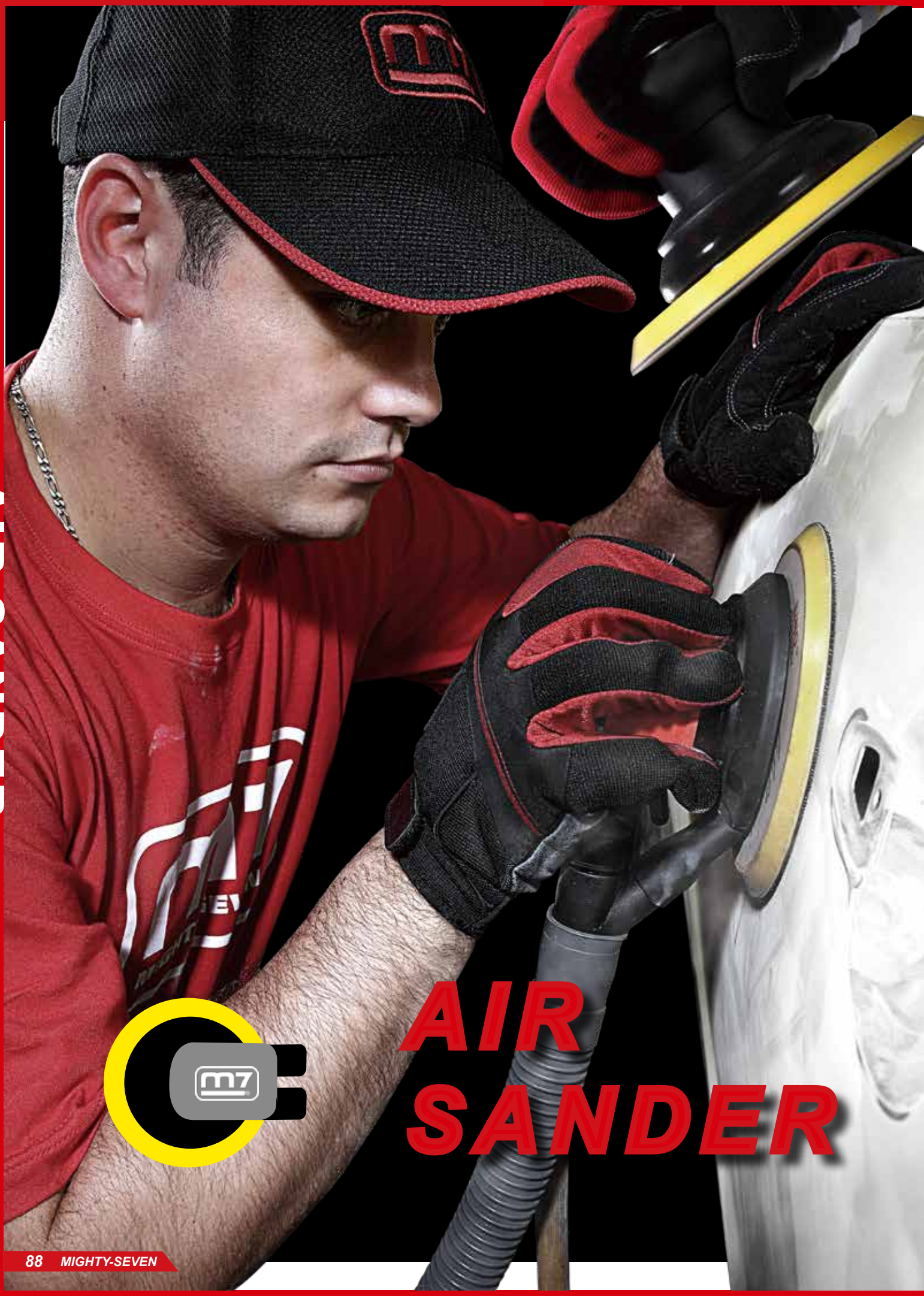

AIR SANDER

QB-51612
QB-51602

AIR RANDOM ORBITALS CENTRAL-VACUUM

Air inlet : 1/4"

12 pieces in one carton

- With automatic brake function, it will not hurt the object.
- Brake function seal also improve vacuuming efficiency.
- Multiple holes sanding pad included.

QB-20203

Air inlet : 1/4"

AIR RANDOM ORBITAL SANDER SELF-VACUUM

20 pieces in one carton

Note : 2" Sanding Pad & 3" Sanding Pad is supplied along with the tool

	Pad Dia	Free Speed	Avg. Air Consumption	Air Pressure	Overall Length	Motor	Net Weight		Air Hose	Sound Pressure	Vibration Level	orbit
	inch(mm)	R.P.M	CFM (L/min)	PSI (bar)	Inch (mm)	HP	LBS(kg)		Inch	dBA	m/s²	mm
QB-51612	6"(152)	12000	3.0(85)	90(6.3)	8-7/8"(225)	0.24	2	0.9	3/8"	81.6	1.5	2.5
QB-51602	6"(152)	10000	3.0(85)	90(6.3)	8-7/8"(225)	0.24	2	0.9	3/8"	81.6	1.5	5.0
QB-20203	2" + 3"	14000	3.0(85)	90(6.3)	5-1/8"(130)	-----	1.1	0.5	3/8"	81.6	1.5	3.0

AIR SANDER

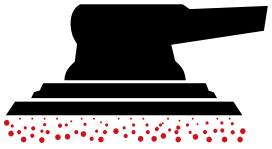

NON-VACUUM

Non-Vacuum SERIES

Repair kit

QB-52502K01

Bearing Ass'y	Rotor Blade	Sanding Pad	Muffler	Wheel Guard

QB-52602K01

Bearing Ass'y	Rotor Blade	Sanding Pad	Muffler	Wheel Guard

QB-42

5" QB-42502 5mm orbit
6" QB-42602 5mm orbit

AIR RANDOM ORBITAL SANDER
Non-Vacuum

Air inlet : 1/4"

8 pieces in one carton

QB-46

10 pieces in one carton

5" QB-46502 5mm orbit
5" QB-46512 2.5mm orbit

6" QB-46602 5mm orbit
6" QB-46612 2.5mm orbit

Air Random Orbital Sander
Non-Vacuum

Air inlet : 1/4"

- Excellent for refinishing or smoothing the surface of metal, wood, leather etc.

Repair kit

Bearing Ass'y	Rotor Blade	Sanding Pad	Muffler	Wheel Guard

6"QB-49602

DUAL ACTION SANDER
NON-VACUUM 9.5mm orbit

Air inlet : 1/4"

10 pieces in one carton

QB-52

5" QB-52502 5mm orbit
6" QB-52602 5mm orbit

AIR RANDOM ORBITAL SANDER
Non-Vacuum

Air inlet : 1/4"

8 pieces in one carton

QB-55

5" QB-55502 5mm orbit
6" QB-55602 5mm orbit

AIR RANDOM ORBITAL SANDER
Non-Vacuum

Air inlet : 1/4"

12 pieces in one carton

5" QB-58502
6" QB-58602

Air 2-Hand Random Orbital Sander
Non-Vacuum 5mm orbit
Air inlet : 1/4"

6 pieces in one carton

	Pad Dia inch(mm)	Free Speed R.P.M	Avg. Air Consumption CFM (L/min)	Air Pressure PSI (bar)	Overall Length Inch (mm)	Motor HP	Net Weight LBS(kg)		Air Hose Inch	Sound Pressure dBA	Vibration Level m/s²	orbit mm
QB-42502	5"(127)	10000	3.85(109)	90(6.3)	6"(153)	0.24	1.7	0.81	3/8"	75.7	1.4	5
QB-42602	6"(152)	10000	3.85(109)	90(6.3)	6-1/2"(166)	0.24	1.8	0.85	3/8"	74.4	1.4	5
QB-46502	5"(127)	10000	3.85(109)	90(6.3)	6"(153)	0.24	1.74	0.79	3/8"	80.1	2.2	5
QB-46512	5"(127)	10000	3.85(109)	90(6.3)	6"(153)	0.24	1.74	0.79	3/8"	80.1	2.2	2.5
QB-46602	6"(152)	10000	3.85(109)	90(6.3)	6-1/2"(166)	0.24	1.74	0.79	3/8"	80.1	2.2	5
QB-46612	6"(152)	10000	3.85(109)	90(6.3)	6-1/2"(166)	0.24	1.74	0.79	3/8"	80.1	2.2	2.5
QB-49602	6"(152)	10000	3.60(102)	90(6.3)	8-21/32"(220)	0.75	2.0	0.9	3/8"	92.5	3.3	9.5
QB-52502	5"(127)	10000	6.0(170)	90(6.3)	6"(153)	0.24	2.2	1.00	3/8"	87.6	1.2	5
QB-52602	6"(152)	10000	6.0(170)	90(6.3)	6-1/2"(166)	0.24	2.65	1.20	3/8"	87.6	1.7	5
QB-55502	5"(127)	10000	3.0(85)	90(6.3)	6-11/16"(170)	0.24	1.5	0.68	3/8"	81.6	1.5	5
QB-55602	6"(152)	10000	3.0(85)	90(6.3)	6-11/16"(170)	0.24	1.5	0.68	3/8"	81.6	1.5	5
QB-58502	5"(127)	10000	3.10(88)	90(6.3)	9-7/16"(240)	0.4	2.6	1.2	3/8"	80.0	1.3	5
QB-58602	6"(152)	10000	3.10(88)	90(6.3)	9-7/16"(240)	0.4	2.6	1.2	3/8"	80.0	1.3	5

Non-Vacuum Sander Accessories

Velcro Or Vinyl Sanding Pad Both Available

Backing Face : velcro

Blister+Card

ITEM NO.	SIZE	Max R.P.M
QB-9302	2"	15000
QB-9303	3"	15000
QB-9305	5"	12000
QB-9306	6"	12000

Backing Face : vinyl

Blister+Card

ITEM NO.	SIZE	Max R.P.M
QB-9345	5"	12000
QB-9307	6"	12000

AIR SANDER

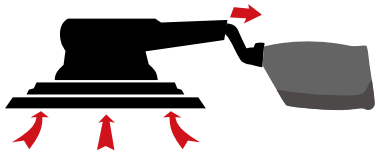

SELF-GENERATED VACUUM

Self-Generated Vacuum SERIES

Repair kit

QB-53902K01

Bearing Ass'y	Rotor Blade	Sanding Pad	Muffler	Wheel Guard
■	■	■		

QB-43

5" QB-43802 5mm orbit
6" QB-43902 5mm orbit

AIR RANDOM ORBITAL SANDER
SELF-GENERATED VACUUM

Air inlet : 1/4"

6 pieces in one carton

QB-47

6" QB-47602 5mm orbit
6" QB-57612 2.5mm orbit

AIR RANDOM ORBITAL SANDER
SELF-GENERATED VACUUM

Air inlet : 1/4"

6 pieces in one carton

- Excellent for refinishing or smoothing the surface of metal, wood, leather etc.

Repair kit

Bearing Ass'y	Rotor Blade	Sanding Pad	Muffler	Wheel Guard
■	■	■	■	

QB-53

5" QB-53802 5mm orbit
6" QB-53902 5mm orbit

AIR RANDOM ORBITAL SANDER
SELF-GENERATED VACUUM

Air inlet : 1/4"

8 pieces in one carton

QB-56602

5" QB-56502 5mm orbit
6" QB-56602 5mm orbit

AIR RANDOM ORBITAL SANDER
SELF-GENERATED VACUUM 5mm orbit

Air inlet : 1/4"

12 pieces in one carton

6" QB-59602

AIR 2-HAND RANDOM ORBITAL SANDER
SELF-GENERATED VACUUM 5mm orbit

Air inlet : 1/4"

6 pieces in one carton

- Aluminum alloy body housing completely covered with composite materials, robust and no cold feeling during long time usage.
- Long grip can reduce reaction while sanding.
- Air adjusting switch for adjusting speed.

Air Regulator

	Pad Dia inch(mm)	Free Speed R.P.M	Avg. Air Consumption CFM (L/min)	Air Pressure PSI (bar)	Overall Length Inch (mm)	Motor HP	Net Weight LBS(kg)		Air Hose Inch	Sound Pressure dBA	Vibration Level m/s²	orbit mm
QB-43802	5"(127)	10000	3.85(109)	90(6.3)	8"(206)	0.24	3.28	1.49	3/8"	83.9	1.3	5
QB-43902	6"(152)	10000	3.85(109)	90(6.3)	8-3/4"(221)	0.24	3.39	1.54	3/8"	83.0	1.4	5
QB-47602	6"(152)	10000	3.85(109)	90(6.3)	7-1/2"(193)	0.24	2.49	1.13	3/8"	84.7	2.2	5
QB-47612	6"(152)	10000	3.85(109)	90(6.3)	7-1/2"(193)	0.24	2.49	1.13	3/8"	84.7	2.2	2.5
QB-53802	5"(127)	10000	6(170)	90(6.3)	6"(153)	0.24	2.2	1.00	3/8"	86.2	1.1	5
QB-53902	6"(152)	10000	6(170)	90(6.3)	6-1/2"(166)	0.24	2.65	1.20	3/8"	80.1	1.2	5
QB-56502	5"(127)	10000	3.0(85)	90(6.3)	8-1/4"(210)	0.24	1.7	0.78	3/8"	81.6	1.5	5
QB-56602	6"(152)	10000	3.0(85)	90(6.3)	8-1/4"(210)	0.24	1.7	0.78	3/8"	81.6	1.5	5
QB-59602	6"(152)	10000	3.10(88)	90(6.3)	9-7/16"(240)	0.4	2.6	1.2	3/8"	80.0	1.3	5

Self-Generated Vacuum Sander Accessories

SIX-HOLE or FIFTEEN-HOLE Sanding Pad Both Available

Backing Face : velcro
velcro & vinyl are both available

Blister+Card

ITEM NO.	SIZE	Max R.P.M
QB-9315 (velcro)	5"	12000
QB-9315 (vinyl)	5"	10000
QB-9315 (velcro)	6"	12000
QB-9315 (vinyl)	6"	12000

Backing Face : velcro
velcro & vinyl are both available

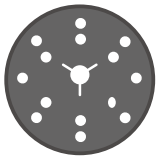

Blister+Card

ITEM NO.	SIZE	Max R.P.M
QB-9327 (velcro)	6"	12000
QB-9366 (vinyl)	6"	12000

AIR SANDER

Central-Vacuum SERIES

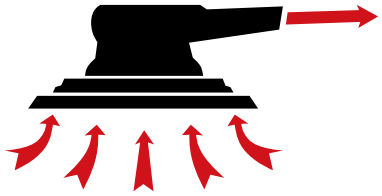

QB-41

6" QB-41902 5mm orbit
AIR RANDOM ORBITAL SANDER
CENTRAL-VACUUM

Air inlet : 1/4"

8 pieces in one carton

QB-45

6" QB-45602 5mm orbit
6" QB-45612 2.5mm orbit

AIR RANDOM ORBITAL SANDER
CENTRAL-VACUUM

Air inlet : 1/4"

10 pieces in one carton

- Excellent for refinishing or smoothing the surface of metal, wood, leather etc.

Repair kit

Bearing Ass'y	Rotor Blade	Sanding Pad	Muffler	Wheel Guard
■	■	■	■	

QB-54

6" QB-54602 (six hole Pad)
6" QB-54702 (fifteen hole Pad)

AIR RANDOM ORBITAL SANDER
CENTRAL-VACUUM

Air inlet : 1/4"

12 pieces in one carton

- Composite light weight body housing.
- Strengthened composite rotor, durable and longer lifetime.

6" QB-57602

AIR 2-HAND RANDOM ORBITAL SANDER
CENTRAL-VACUUM 5mm orbit
Air inlet : 1/4"

6 pieces in one carton

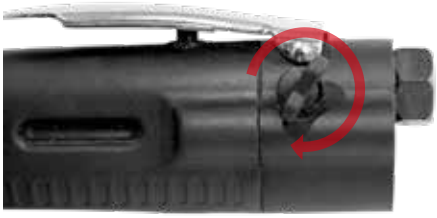

Air Regulator

	Pad Dia inch(mm)	Free Speed R.P.M	Avg. Air Consumption CFM (L/min)	Air Pressure PSI (bar)	Overall Length Inch (mm)	Motor HP	Net Weight LBS(kg)		Air Hose Inch	Sound Pressure dBA	Vibration Level m/s²	orbit mm
QB-41902	6"(152)	10000	3.85(109)	90(6.3)	8"(206)	0.24	2.0	0.91	3/8"	81.5	1.2	5
QB-45602	6"(152)	10000	3.85(109)	90(6.3)	7-1/2"(193)	0.24	1.85	0.84	3/8"	81.6	2.2	5
QB-45612	6"(152)	10000	3.85(109)	90(6.3)	7-1/2"(193)	0.24	1.85	0.84	3/8"	81.6	2.2	2.5
QB-54602	6"(152)	10000	3.0(85)	90(6.3)	8-1/4"(210)	0.24	1.7	0.78	3/8"	81.6	1.5	5
QB-54702	6"(152)	10000	3.0(85)	90(6.3)	8-1/4"(210)	0.24	1.7	0.78	3/8"	81.6	1.5	5
QB-57602	6"(152)	10000	3.10(88)	90(6.3)	9-7/16"(240)	0.40	2.6	1.2	3/8"	80.0	1.3	5

Central-Vacuum Sander Accessories

SIX-HOLE or FIFTEEN-HOLE Sanding Pad Both Available

Backing Face : velcro
velcro & vinyl are both available

Blister+Card

ITEM NO.	SIZE	Max R.P.M
QB-9315 (velcro)	5"	12000
QB-9315 (vinyl)	5"	12000
QB-9315 (velcro)	6"	12000
QB-9315 (vinyl)	6"	12000

Backing Face : velcro
velcro & vinyl are both available

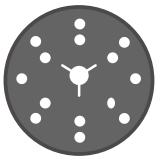

Blister+Card

ITEM NO.	SIZE	Max R.P.M
QB-9327 (velcro)	6"	12000
QB-9366 (vinyl)	6"	12000

AIR SQUARE SANDER

Square Sander SERIES

★★★★

QB-48012

AIR JITTERBUG SANDER
NON-VACUUM 2.5mm orbit

Air inlet : 1/4"

12 pieces in one carton

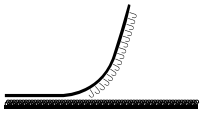

Use with VELCRO TYPE Sanding Paper

NON-VACUUM

★★★★★

QB-48111

AIR JITTERBUG SANDER
NON-VACUUM 2.5mm orbit

Air inlet : 1/4"

12 pieces in one carton

Sanding paper mounted by CLIP

NON-VACUUM

★★★★

QB-48112

AIR JITTERBUG SANDER
NON-VACUUM 2.5mm orbit

Air inlet : 1/4"

12 pieces in one carton

NON-VACUUM

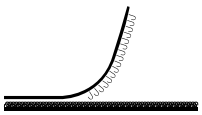

Use with VELCRO TYPE Sanding Paper

QB-48212

AIR JITTERBUG SANDER
NON-VACUUM 2.5mm orbit

Air inlet : 1/4"

12 pieces in one carton

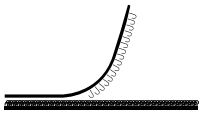

Use with VELCRO TYPE Sanding Paper

NON-VACUUM

QB-48211

AIR JITTERBUG LINE SANDER
NON-VACUUM 2.5mm orbit

Air inlet : 1/4"

5 pieces in one carton

Sanding paper mounted by CLIP

NON-VACUUM

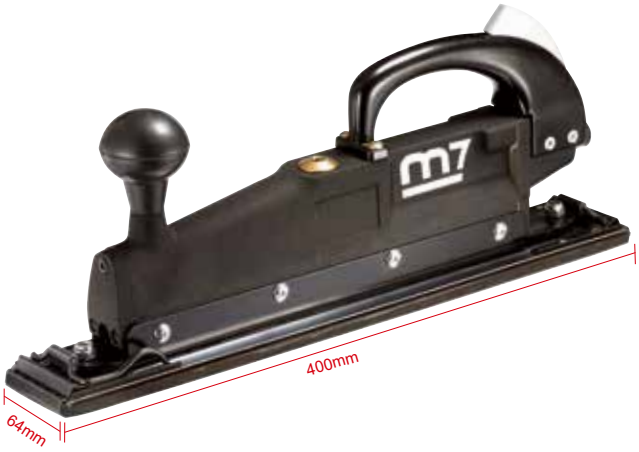

	Pad Dia inch(mm)	Free Speed R.P.M	Avg. Air Consumption CFM (L/min)	Air Pressure PSI (bar)	Overall Length Inch (mm)	Motor HP	Net Weight LBS(kg)		Air Hose Inch	Sound Pressure dBA	Vibration Level m/s²	orbit mm
QB-48012	3"x4"(75x100)	10000	5.0(141)	90(6.3)	5-3/8"(137)	0.24	1.83	0.83	3/8"	83.0	1.5	2.5
QB-48111	4"x4-3/8"(100x110)	11000	7.0(198)	90(6.3)	5-1/5"(130)	0.28	2.0	0.91	3/8"	83.0	1.5	2.5
QB-48112	4"x4-3/8"(100x110)	10000	5.0(141)	90(6.3)	5-3/8"(136)	0.24	1.7	0.78	3/8"	83.0	1.5	2.5
QB-48211	2-1/2"x15-3/4"(64x400)	2100	5.0(141)	90(6.3)	17-1/2"(444)	0.24	6.1	2.8	3/8"	83.0	1.5	2.5
QB-48212	7"x3-1/2"(93x180)	10000	5.0(141)	90(6.3)	7"(180)	0.24	2.0	0.94	3/8"	83.0	1.5	2.5

AIR GEAR DRIVEN SANDER

6" QB-57642

AIR 2-HAND RANDOM ORBITAL SANDER
CENTRAL-VACUUM 5mm orbit

Equipped with QB-57642P39
6-hole Vacuum Pad

Air inlet : 1/4"

6 pieces in one carton

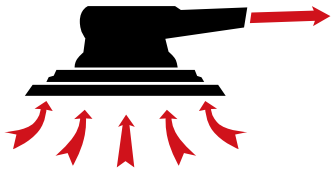

CENTRAL-VACUUM

GEAR DRIVEN

QB-57642P39

Equiped with driven model only

6" QB-59642

AIR 2-HAND RANDOM ORBITAL SANDER
SELF-GENERATED VACUUM 5mm orbit

Equipped with QB-59642P39
6-hole Vacuum Pad

Air inlet : 1/4"

6 pieces in one carton

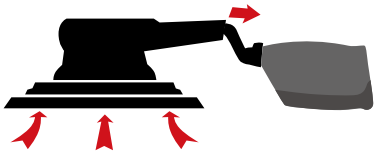

SELF-GENERATED VACUUM

GEAR DRIVEN

QB-59642P39

Equiped with driven model only

5" QB-58542
6" QB-58642

AIR GEAR DRIVEN 2-HAND RANDOM ORBITAL SANDER
Non-Vacuum 5mm orbit

Equipped with QB-58642P39 Non-Vacuum Pad

Air inlet : 1/4"

6 pieces in one carton

- Gear transmission for quicker hard sanding, saving time and longer lifespan.
- Aluminum alloy body housing completely covered with composite materials, robust and no cold feeling during long time usage.
- Long grip can reduce reaction while sanding.
- Air adjusting switch for adjusting speed.

5" QB-58542P39
6" QB-58642P39

Equiped with driven model only

NON-VACUUM

GEAR DRIVEN

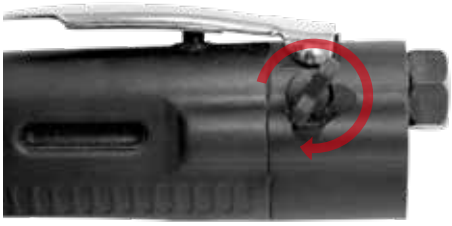

Air Regulator

	Pad Dia	Free Speed	Avg. Air Consumption	Air Pressure	Overall Length	Motor	Net Weight		Air Hose	Sound Pressure	Vibration Level	orbit
	inch(mm)	R.P.M	CFM (L/min)	PSI (bar)	Inch (mm)	HP	LBS(kg)		Inch	dBA	m/s²	mm
QB-57642	6"(152)	900	3.10(88)	90(6.3)	9-7/16"(240)	0.4	3.5	1.6	3/8"	82.0	<2.5	5
QB-59642	6"(152)	900	3.10(88)	90(6.3)	9-7/16"(240)	0.4	3.5	1.6	3/8"	82.0	<2.5	5
QB-58542	5"(127)	900	3.10(88)	90(6.3)	9-7/16"(240)	0.4	3.3	1.5	3/8"	82.0	<2.5	5
QB-58642	6"(152)	900	3.10(88)	90(6.3)	9-7/16"(240)	0.4	3.5	1.6	3/8"	82.0	<2.5	5

AIR PISTOL POLISHER

QP-113

AIR PISTOL SANDER

2.5mm orbit Air inlet : 1/4"

10 pieces in one carton

QP-123

AIR PISTOL POLISHER

Air inlet : 1/4"

10 pieces in one carton

QP-123QP

- Air Pistol Sander, 3" Pad Dia
- QP-113 :Air Pistol Sander, 3" Pad Dia
- QP-123 :Air Pistol Polisher, 3" Pad Dia
- 1/4" Air Adaptor Couplings Male Thread Type
- 3" Sponge (Rough) & 3" Sponge (Medium)

QP-215

AIR HIGH SPEED SANDER

Air inlet : 1/4"

10 pieces in one carton

QP-317

AIR ANGLE POLISHER

Air inlet : 1/4"

10 pieces in one carton

QP-307 M/S

AIR ANGLE POLISHER

Air inlet : 1/4"

QP-327 M/S

AIR ANGLE POLISHER

Air inlet : 1/4"

6 pieces in one carton

QP-335

VERTICAL POLISHER

Air inlet : 1/4"

10 pieces in one carton

	Pad Dia	Spindle Size	Free Speed	Avg. Air Consumption	Air Pressure	Overall Length	Motor	Net Weight		Air Hose	Sound Pressure	Vibration Level	orbit
	inch(mm)		R.P.M	CFM (L/min)	PSI (bar)	Inch (mm)	HP	LBS(kg)		Inch	dBA	m/s²	mm
QP-113	3"(76)	5/16"-24	15000	3.5(99)	90(6.3)	5"(127)	0.40	1.5	0.72	3/8"	74.0	0.3	2.5
QP-123	3"(76)	5/16"-24	2100	3.5(99)	90(6.3)	5-5/16"(135)	0.40	1.69	0.77	3/8"	74.0	0.21	----
QP-215	5"(127)	7/16"-20	16000	6.5(184)	90(6.3)	6-19/64"(160)	0.80	2.6	1.20	3/8"	60.0	1.8	----
QP-317	7"(178)	5/8"-11	2500	6.0(169)	90(6.3)	16"(406)	0.40	4.0	2.04	3/8"	84.0	2.5	----
QP-307	7"(178)	M14xP2	4500	6.0(169)	90(6.3)	16"(406)	0.40	4.0	2.04	3/8"	84.0	2.5	----
QP-327	7"(178)	M14xP2	2500	6.0(169)	90(6.3)	16"(406)	0.40	4.0	2.04	3/8"	84.0	2.5	----
QP-335	5"(127)	5/16"-24	3000	3.65(103)	90(6.3)	8"(203)	0.55	1.12	0.53	3/8"	85.0	2.5	----

AIR CUTTING TOOLS

QD-242

AIR FILE WITH HOSE

Air inlet : 1/4"

Note : The air mini saw is not supplied along with the tool

10 pieces in one carton

Air Mini Saw Can Also Be Installed

- 5pcs 5.0mm file set included

QD-230

AIR MINI SAW WITH HOSE

Air inlet : 1/4"

10 pieces in one carton

- 4pcs 5.0mm file set included
- 1pcs 32T saw blade included

QD-221

AIR SAW WITH HOSE

Air inlet : 1/4"

10 pieces in one carton

- Quick change saw blade holder allows for easy blade changing
- Adjustable guard / guide controls depth of cut precisely
- Excellent for cutting sheet aluminum, plastic and sheet metal up to 1.6mm
- 5pcs 4.0mm file set included
- 1pc 32T+1pc 24T saw blade included

	Strokes Length	Strokes Per min.	Collet Size	Avg. Air Consumption	Air Pressure	Overall Length	Net Weight		Air Hose	Sound Pressure	Vibration Level
	mm	S.P.M	mm	CFM (L/min)	PSI (bar)	Inch (mm)	LBS	kg	Inch	dBA	m/s²
		S.P.M					lb	kg			
QD-221	10	5000	4.0	4.0 (113)	90(6.3)	9-3/4"(250)	1.76	0.8	3/8"	81.9	4.1
QD-230	5	7000	5.0	2.5 (70)	90(6.3)	7"(180)	1.10	0.5	3/8"	78.0	2.4
QD-242	5	7000	5.0	5.3 (150)	90(6.3)	17-9/16"(700)	1.28	0.58	3/8"	80.0	4.5

QD-260

AIR MINI SAW / FILE

Air inlet : 1/4"

Note : The package contains a flat file and two saw blades

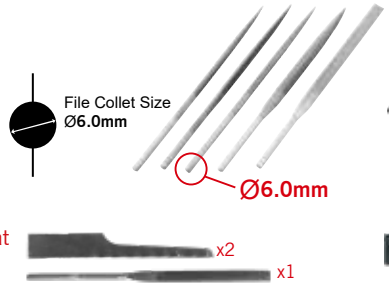

- 360° swivel air-inlet can precisely control the cutting direction.
- Adjustable blade guard for controlling cutting depth/precisely cutting complex shapes and straight lines.
- Gear type transmission can provide greater torque than traditional piston type structure.
- Suitable for body, muffler and exhaust device, and sunroof installation.

QD-501

GEAR DRIVEN AIR SAW (3 in 1)

Air inlet : 1/4"

Note : The package contains a file and sawzall blande and air saw.

GEAR DRIVING

10 pieces in one carton

- Chuck can mount with Air Saw / Sawzall Blades / Files.
- Transmission structure not easily stopped by external force.
- Soft rubber hand grip.

	Strokes Length mm	Strokes Per min. S.P.M	Avg. Air Consumption CFM (L/min)	Air Pressure PSI (bar)	Overall Length Inch (mm)	Net Weight LBS	Net Weight kg	Air Hose Inch	Sound Pressure dBA	Vibration Level m/s²
		S.P.M				lb	kg			
QD-260	8	7000	4.5 (127)	90 (6.3)	6-11/16" (170)	1	0.5	3/8"	-----	-----
QD-501	10	7000	4.5(127)	90(6.3)	11-5/8"(296)	2.6	1.2	3/8"	78	4.5

AIR CUTTING TOOLS

QC-213

3" HEAVY DUTY AIR CUT-OFF TOOL

Available Dimension of inner hold :Ø 10mm
Air inlet : 1/4"

- 0.9hp high power motor
- Excellent for cutting rusted bolts, nuts, motor exhaust clamps or hangers, sheet metal, fiberglass etc.

10 pieces in one carton

Note:wheel is supplied with the tool

QC-213T

3" HEAVY DUTY AIR CUT-OFF TOOL

Available Dimension of inner hold : Ø 10mm
Air inlet : 1/4"

- Excellent for cutting rusted bolts, nuts, motor exhaust clamps or hangers, sheet metal, fiberglass etc.

10 pieces in one carton

Note:wheel is supplied with the tool

QC-234

4" HEAVY DUTY AIR CUT-OFF TOOL

Available Dimension of inner hold :Ø 10mm
Air inlet : 1/4"

- Excellent for cutting rusted bolts, nuts, motor exhaust clamps or hangers, sheet metal, fiberglass etc.

10 pieces in one carton

Note:wheel is supplied with the tool

QC-234T

4" AIR CORNER CUT-OFF TOOL

Available Dimension of inner hold : Ø 10mm Ø 16mm
Air inlet : 1/4"

- Excellent for cutting rusted bolts, nuts, motor exhaust clamps or hangers, sheet metal, fiberglass etc.

10 pieces in one carton

Note:wheel is supplied with the tool

	Belt Size / Pad Dia inch(mm)	Free Speed R.P.M	Avg. Air Consumption CFM (L/min)	Air Pressure PSI (bar)	Overall Length Inch (mm)	Motor HP	Net Weight LBS	Net Weight kg	Air Hose Inch	Sound Pressure dBA	Vibration Level m/s²
QC-213	3"(75)	20000	10.0(283)	90(6.3)	7-7/8"(200)	0.9	1.9	0.86	3/8"	80.2	10.8
QC-213T	3"(75)	22000	5.0(141)	90(6.3)	7-7/8"(200)	0.5	1.8	0.82	3/8"	85.0	3.0
QC-234	4"(100)	16000	10.0(283)	90(6.3)	14"(355)	0.9	3.5	1.59	3/8"	85.0	5.0
QC-234T	4"(100)	15000	5.0(141)	90(6.3)	13-9/16"(345)	0.5	3.1	1.41	3/8"	85.0	2.2

QC-253

3" AIR CUT-OFF TOOL

Air inlet : 1/4"

10 pieces in one carton

Note:wheel is supplied with the tool

QC-254

4" AIR CORNER CUT-OFF TOOL

Available Dimension of inner hold :Ø 10mm
Air inlet : 1/4"

10 pieces in one carton

Note:wheel is supplied with the tool

QC-264

4" AIR CORNER CUT-OFF TOOL

Available Dimension of inner hold : Ø 10mm Ø 16mm
Air inlet : 1/4"

- Excellent for cutting rusted bolts, nuts, motor exhaust clamps or hangers, sheet metal, fiberglass etc.

10 pieces in one carton

Note:wheel is supplied with the tool

	Belt Size / Pad Dia inch(mm)	Free Speed R.P.M	Avg. Air Consumption CFM (L/min)	Air Pressure PSI (bar)	Overall Length Inch (mm)	Motor HP	Net Weight LBS	Net Weight kg	Air Hose Inch	Sound Pressure dBA	Vibration Level m/s²
QC-253	3"(75)	24000	4.0(113)	90(6.3)	8"(203)	0.6	1.7	0.8	3/8"	91.0	1.2
QC-254	4"(100)	20000	5.0(141)	90(6.3)	8-1/8"(206)	0.6	2.0	0.9	3/8"	81.0	0.8
QC-264	4"(100)	15000	5.0(141)	90(6.3)	9-5/32"(232)	0.5	2.4	1.1	3/8"	85.0	2.2

QC-512

MINI AIR CHAMFERING TOOLS

Extreme small size and light weight air tool.
Also have variable chamfering speed function

Triangle Indexable Inserts

MIGHTY COMPACT

10 pieces in one carton

FEATURES

- Triangle type Indexable Inserts.
- Variable chamfering speed.
- Extremely small size chamfering air tool.

	Chamfering Capacity	Free Speed R.P.M	Overall Length inch(mm)	Air Pressure PSI (bar)	Avg. Air Consumption CFM	Net Weight LBS	Net Weight kg	Air Hose Inch	Sound Pressure dBA
QC-512	C0.1 - C2.0	28000	4-1/7"(105)	90 (6.3)	2	1.1	0.5	3/8"	85

AIR CUTTING TOOLS

QK-131

Air Oscillating Tool With Universal Adapter

Air inlet : 1/4"

20 pieces in one carton

Note:Blade is not supplied along with the tool

Patented flange can share pneumatic scraper & electric grinder blade.

FEATURES

- With Patent Flange, suitable most air Knife/Multi-Cutter Blade
- Extremely light weight, only 0.67 kg
- Low consumption, only 1.9 CFM (General 5 CFM)
- Only 1/3 size to most of oscillating tool on the market
- 360° adjustable exhaust cover
- Rubber sleeve provide absolute comfort feel and also reducing vibration

QK-111

AIR KNIFE

Air inlet : 1/4"

10 pieces in one carton

QK-121

AIR KNIFE

Air inlet : 1/4"

QB-9320

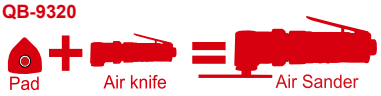

	Oscillation per min	Avg. Air Consumption CFM (L/min)	Overall Length Inch (mm)	Net Weight LBS(kg)	Air Hose Inch	Sound Pressure dBA	Vibration Level m/s²
QK-131	20000	1.9(121)	7-1/8"(176)	1.5(0.6)	3/8"	78	4.5
QK-111	20000	6.0(170)	7-5/64" (180)	2.4(1.1)	3/8"	75	3.9
QK-111T	20000	5.0(141)	8-3/16" (208)	2.0(0.92)	3/8"	85	3.3
QK-121	19000	4.3(121)	6-15/16" (208)	1.3(0.6)	3/8"	91	2.8

QC-333

Air inlet : 1/4"

FLEX-HEAD AIR CUT-OFF TOOL

Note:wheel is supplied with the tool

10 pieces in one carton

3" wheel

- 0.9 hp high power motor
- Excellent for cutting rusted bolts, nuts, motor exhaust clamps or hangers, sheet metal, fiberglass etc.

3 Angle Adjustable

	Pad Dia inch(mm)	Free Speed R.P.M	Avg. Air Consumption CFM (L/min)	Air Pressure PSI (bar)	Overall Length Inch (mm)	Motor HP	Net Weight LBS	Net Weight kg	Air Hose Inch	Sound Pressure dBA	Vibration Level m/s²
QC-333	3"	20000	3.6(102)	90 (6.3)	9-1/16"(230)	-----	2.42	1.1	3/8"	-----	-----

PN-150
PN-180

AIR PUNCH & FLANGE TOOL

Air inlet : 1/4"

10 pieces in one carton

PN-250
PN-280

AIR PUNCH & FLANGE TOOL

Air inlet : 1/4"

10 pieces in one carton

QK-111T

AIR KNIFE Air inlet : 1/4"

10 pieces in one carton

Stylized grip

QK-112 Contains Blade
QK-112N

AIR SCRAPER KIT

Air inlet : 1/4"

- Removes gaskets, paint, rust and other materials
- Removes undercoating, seam sealers, etc.
- Built-in regulator

QK-112

Blades included:

1. 1.77" Wide Blade
2. 1.75" L-Shaped Blade
3. 1" Wide 45° Blade
4. 1" Wide Blade

QK-112N

	Strokes Length mm	Strokes Per min. S.P.M	Avg. Air Consumption CFM (L/min)	Air Pressure PSI (bar)	Overall Length Inch (mm)	Net Weight LBS	Net Weight kg	Air Hose Inch	Sound Pressure dBA	Vibration Level m/s²
QK-112	16	4200	3.0 (84.9)	90(6.3)	7-23/32"(196)	1.52	0.69	3/8"	93.0	9.0

	Punch Diameter mm	Capacity	Avg. Air Consumption CFM (L/min)	Air Pressure PSI (bar)	Overall Length Inch (mm)	Net Weight LBS	Net Weight kg	Air Hose Inch	Sound Pressure dBA	Vibration Level m/s²
PN-150	5	1.6 mm (Steel)	4.0(113)	90(6.3)	10"(254)	2.5	1.15	3/8"	62.0	0.1
PN-180	8	1.2 mm (Steel)	4.0(113)	90(6.3)	10"(254)	2.5	1.15	3/8"	62.0	0.1
PN-250	5	1.6 mm (Steel)	4.0(113)	90(6.3)	7-15/32"(190)	2.6	1.2	3/8"	62.0	0.1
PN-280	8	1.2 mm (Steel)	4.0(113)	90(6.3)	7-15/32"(190)	2.6	1.2	3/8"	62.0	0.1

QD-321

LOW VIBRATION AIR BODY SAW

Air inlet : 1/4"

15 pieces in one carton

30% Lower Vibration

20% Efficiency

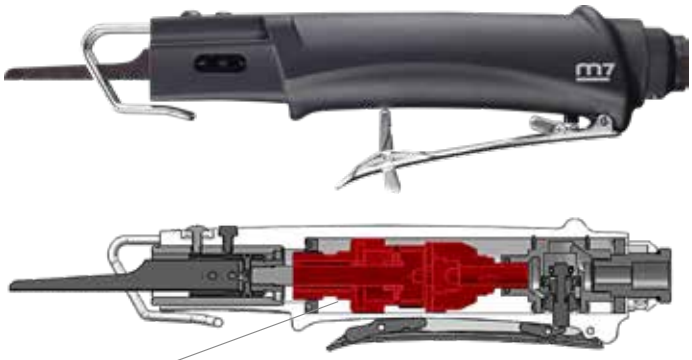

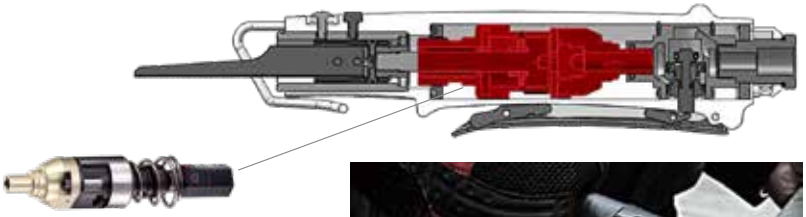

Vibration-Reduced cylinder design

Compare With ordinary models

- Special air flow design to reduce vibration 30%
- Streamline modelling for better ergonomics
- Long stroke to raise work efficiency 20%
- Cylinder specially processed to raise lifetime 30%

QD-291N

AIR SAW SET

Air inlet : 1/4"

10 pieces in one carton

Contents

- Air saw tool (1 pcs)
- 24T Saw Blade (6 pcs)
- 32T Saw Blade (6 pcs)
- Allen Key:4mm,3mm (1pcs)
- 1/4" 360° plug
- 5 Pieces file set
- Mini oiler 1/4" (1 pcs)

- Quick change saw blade holder allows blade changing easily.
- Adjustable guard / guide controls depth of cut precisely.

	Strokes Length mm	Strokes Per min. S.P.M	Collef Size mm	Avg. Air Consumption CFM (L/min)	Air Pressure PSI (bar)	Overall Length Inch (mm)	Net Weight LBS	Net Weight kg	Air Hose Inch	Sound Pressure dBA	Vibration Level m/s²
		S.P.M					lb	kg			
QD-291	10	9000	5.0	4.0 (113)	90(6.3)	9-1/4"(235)	1.30	0.6	3/8"	80.0	2.4
QD-321	14.5	11000	5.0	4.0 (113)	90(6.3)	9-1/4"(230)	1.7	0.6	3/8"	83.0	2.0

QG-102

AIR SHEAR / Straight Type
Air inlet : 1/4"

10 pieces in one carton

QG-202

AIR SHEAR / Pistol Type
Air inlet : 1/4"

10 pieces in one carton

QG-103

AIR NIBBLER
Air inlet : 1/4"

10 pieces in one carton

	Strokes Per min S.P.M	Avg. Air Consumption CFM (L/min)	Air Pressure PSI (bar)	Overall Length Inch (mm)	Net Weight LBS	Net Weight kg	Air Hose Inch	Sound Pressure dBA	Vibration Level m/s²	Cut Capacity mm	
	S.P.M			L	lb	kg				steel	aluminum
QG-102	2600	6.0(170)	90(6.3)	10"(254)	2.2	1.00	3/8"	85.8	2.4	1.2	1.6
QG-202	2600	6.5(184)	90(6.3)	8-1/4"(210)	2.4	1.10	3/8"	89.1	2.9	1.2	1.6
QG-103	2600	3.0 (85)	90(6.3)	7-3/5"(193)	2.2	1.00	3/8"	88.0	2.8	1.2	1.6

AIR
DRILL

QE-3031

3/8" AIR REVERSIBLE DRILL
With Key Chuck

Air inlet : 1/4"

10 pieces in one carton

- Max Tapping Capacity M6
- Max Drill Capacity ϕ10
- Aluminum die-casting body provide durably life-time

Forward & Reverse Switch

	Chuck Size inch(mm)	Free Speed R.P.M	Motor hp	Avg. Air Consumption CFM (L/min)	Air Pressure PSI (bar)	Overall Length Inch (mm)	Net Weight LBS	Net Weight kg	Air Hose Inch	Sound Pressure dBA	Vibration Level m/s²
QE-3031	3/8"	1800	0.5	4(113)	90(6.3)	8-1/2" (215)	3.2	1.5	3/8"	87	2.0

QE-831

3/8"AIR REVERSIBE DRILL
WITH KEYLESS CHUCK

Air inlet : 1/4"

10 pieces in one carton

- One finger forward/reverse switch.
- Planet gear to strengthen drilling capability.

3pcs Planet Gear

	Chuck Size inch(mm)	Free Speed R.P.M	Motor hp	Stall Torque	Avg. Air Consumption CFM (L/min)	Air Pressure PSI (bar)	Overall Length Inch (mm)	Net Weight LBS	Net Weight kg	Air Hose Inch	Sound Pressure dBA	Vibration Level m/s²
QE-831	3/8"(10)	1800	0.45	7.33	4.0(113)	90(6.3)	7-1/4"(185)	2.5	1.10	3/8"	83.0	0.3

AIR DRILL

3/8"
Chuck Size

QE-331/332
QE-331 3/8" AIR REVERSIBLE DRILL
QE-332 3/8" AIR DRILL
With Keyless Chuck

Air inlet : 1/4"
10 pieces in one carton

3pcs Planet Gear

QE-333/334
QE-333 3/8" AIR REVERSIBLE DRILL
QE-334 3/8" AIR DRILL
With Key Chuck

Air inlet : 1/4"
10 pieces in one carton

3pcs Planet Gear

QE-431/432
QE-431 3/8" AIR REVERSIBLE DRILL
QE-432 3/8" AIR DRILL
With Keyless Chuck

Air inlet : 1/4"
10 pieces in one carton

2pcs Planet Gear
with bearing

QE-433/434
QE-433 3/8" AIR REVERSIBLE DRILL
QE-434 3/8" AIR DRILL
With Key Chuck

Air inlet : 1/4"
10 pieces in one carton

2pcs Planet Gear
with bearing

QE-532
3/8" AIR DRILL
With Keyless Chuck

Air inlet : 1/4"
10 pieces in one carton

3pcs Planet Gear
with bearing

QE-533
3/8" AIR REVERSIBLE DRILL
With Key Chuck

Air inlet : 1/4"
10 pieces in one carton

3pcs Planet Gear
with bearing

QE-833
3/8" AIR REVERSIBLE DRILL
With Key Chuck

Air inlet : 1/4"
10 pieces in one carton

3pcs Planet Gear

QE-633

3/8" 90° AIR REVERSIBLE DRILL
With Keyless Chuck

Air inlet : 1/4"
10 pieces in one carton

2pcs Planet Gear with bearing

QE-933

3/8" AIR REVERSIBLE DRILL
With Keyless Chuck

Air inlet : 1/4"
20 pieces in one carton

2pcs Planet Gear with bearing

QE-935

3/8" AIR STRAIGHT DRILL
With Keyless Chuck

Air inlet : 1/4"
10 pieces in one carton

2pcs Planet Gear with bearing

Stylized grip

QE-936

3/8" AIR STRAIGHT DRILL
WITH KEY CHUCK

Air inlet : 1/4"
10 pieces in one carton

Stylized grip

	Chuck Size inch(mm)	Free Speed R.P.M	Motor hp	Stall Torque N.m	Avg. Air Consumption CFM (L/min)	Air Pressure PSI (bar)	Overall Length Inch (mm)	Net Weight LBS	Net Weight kg	Air Hose Inch	Sound Pressure dBA	Vibration Level m/s²
QE-331	3/8"(10)	1800	0.65	6.29	6.5(184)	90(6.3)	8"(203)	2.42	1.1	3/8"	96.5	0.3
QE-332	3/8"(10)	2200	0.60	6.31	6.5(184)	90(6.3)	7-1/2"(190)	2.20	1.0	3/8"	96.5	0.3
QE-333	3/8"(10)	1800	0.65	6.29	6.5(184)	90(6.3)	8"(203)	2.42	1.1	3/8"	92.0	0.2
QE-334	3/8"(10)	2200	0.60	6.31	6.5(184)	90(6.3)	7-1/2"(190)	2.20	1.0	3/8"	92.0	0.2
QE-431	3/8"(10)	1800	0.50	10.9	4.0(112)	90(6.3)	8-29/32"(226)	2.6	1.18	3/8"	90.0	3.0
QE-432	3/8"(10)	2200	0.70	8.76	4.8(135)	90(6.3)	8-29/32"(226)	2.6	1.18	3/8"	90.0	3.0
QE-433	3/8"(10)	1800	0.50	10.9	4.0(112)	90(6.3)	9-1/16"(230)	2.7	1.23	3/8"	90.0	3.0
QE-434	3/8"(10)	2200	0.70	8.76	4.8(135)	90(6.3)	9-1/16"(230	2.7	1.23	3/8"	90.0	3.0
QE-532	3/8"(10)	2800	0.70	8.58	4.8(135)	90(6.3)	9-9/16"(243)	2.7	1.23	3/8"	90.0	3.0
QE-533	3/8"(10)	2200	0.50	10.58	4.0(112)	90(6.3)	9-13/32"(189	2.7	1.23	3/8"	90.0	3.0
QE-833	3/8"(10)	1800	0.45	7.33	4.0(113)	90(6.3)	7-1/4"(185)	2.7	1.23	3/8"	83.0	0.3
QE-633	3/8"(10)	1600	0.50	6.06	3.0(85)	90(6.3)	8-1/4"(210)	2.4	1.10	3/8"	72.0	2.5
QE-933	3/8"(10)	2600	0.50	3.85	3.0(85)	90(6.3)	8-15/32"(215)	2.0	0.90	3/8"	72.0	2.5
QE-935	3/8"(10)	4000	0.5	2.98	5.0(141)	90(6.3)	9"(230)	1.89	0.86	3/8"	85.0	1.6
QE-936	3/8"(10)	22000	0.5	-----	5.0(141)	90(6.3)	8-9/16"(218)	1.62	0.74	3/8"	85.0	1.2

AIR DRILL

1/2"

Chuck Size

QE-341/342

QE-341 1/2" Air Reversible Drill
QE-342 1/2" Air Drill

With Keyless Chuck

Air inlet : 1/4"

10 pieces in one carton

3pcs Planet Gear x 2Set

QE-343/344

QE-343 1/2" Air Reversible Drill
QE-344 1/2" Air Drill

With Key Chuck

Air inlet : 1/4"

10 pieces in one carton

3pcs Planet Gear x 2Set

QE-441/442

QE-441 1/2" Air Reversible Drill
QE-442 1/2" Air Drill

With Keyless Chuck

Air inlet : 1/4"

10 pieces in one carton

2pcs Planet Gear
x 2Set bearing

QE-443

QE-443 1/2" Air Reversible Drill
With Key Chuck

Air inlet : 1/4"

10 pieces in one carton

2pcs Planet Gear
x 2Set bearing

QE-542

1/2" Air Drill
With Keyless Chuck

Air inlet : 1/4"

10 pieces in one carton

3pcs Planet Gear
x 2Set bearing

QE-543

1/2" Air Reversible Drill
With Key Chuck

Air inlet : 1/4"

10 pieces in one carton

3pcs Planet Gear
x 2Set bearing

QE-841

1/2" Air Reversible Drill
With Keyless Chuck

Air inlet : 1/4"

10 pieces in one carton

3pcs Planet Gear x 2Set

QE-843

1/2" Air Reversible Drill
With Key Chuck

Air inlet : 1/4"

10 pieces in one carton

3pcs Planet Gear x 2Set

QE-845

1/2" Air Reversible Drill
With Key Chuck

Air inlet : 1/4"

10 pieces in one carton

3pcs Planet Gear x 2Set

	Chuck Size inch(mm)	Free Speed R.P.M	Motor hp	Stall Torque N.m	Avg. Air Consumption CFM (L/min)	Air Pressure PSI (bar)	Overall Length Inch (mm)	Net Weight LBS	Net Weight kg	Air Hose Inch	Sound Pressure dBA	Vibration Level m/s²
QE-341	1/2"(13)	800	0.65	11.15	6.5(184)	90(6.3)	9"(230)	3.96	1.8	3/8"	96.5	0.1
QE-342	1/2"(13)	800	0.60	11.03	6.5(184)	90(6.3)	8-1/4"(209)	3.74	1.7	3/8"	96.5	0.1
QE-343	1/2"(13)	800	0.65	11.15	6.5(184)	90(6.3)	9"(230)	3.96	1.8	3/8"	97.5	0.1
QE-344	1/2"(13)	800	0.60	11.03	6.5(184)	90(6.3)	8-1/4"(209)	3.74	1.7	3/8"	97.5	0.1
QE-441	1/2"(13)	1100	0.50	14.68	4.0(112)	90(6.3)	10-5/8"(270)	3.5	1.58	3/8"	90.0	3.0
QE-442	1/2"(13)	1300	0.70	13.54	4.8(135)	90(6.3)	10-5/8"(270)	3.5	1.58	3/8"	90.0	3.0
QE-443	1/2"(13)	1100	0.50	14.68	4.0(112)	90(6.3)	10-5/8"(270)	3.8	1.73	3/8"	90.0	3.0
QE-542	1/2"(13)	1300	0.70	15.89	4.8(135)	90(6.3)	11"(280)	3.8	1.73	3/8"	90.0	3.0
QE-543	1/2"(13)	1100	0.50	14.89	4.0(112)	90(6.3)	10-7/8"(276)	3.8	1.73	3/8"	90.0	3.0
QE-841	1/2"(13)	800	0.45	12.58	4.0(113)	90(6.3)	8-1/4"(210)	3.7	1.7	3/8"	83.0	0.3
QE-843	1/2"(13)	800	0.45	12.58	4.0(113)	90(6.3)	8-1/4"(210)	3.9	1.8	3/8"	83.0	0.3
QE-845	1/2"(13)	500	0.45	12.83	4.0(113)	90(6.3)	8-1/4"(210)	3.9	1.8	3/8"	83.0	0.3

AIR DRILL

PC-2010

ADJUSTABLE TORQUE AIR TAPPING TOOL

Air inlet : 1/4"

6 pieces in one carton

	Capacity steel	Capacity copper	Capacity aluminum	Stall Torque N.m	Free Speed R.P.M	Stroke Length inch(mm)	Avg. Air Consumption L/cycle	Air Pressure PSI (bar)	Net Weight LBS	Net Weight kg	Air Hose Inch	Sound Pressure dBA	Vibration Level m/s²
PC-2010	M3~M8	M3~M12	M3~M12	------	150	12"(305)	6.5(184)	90(6.3)	5.4	2.45	3/8"	82	1.5

PC-901

ADUSTABLE TORQUE AIR TAPPING ADAPTER

HEX:8mm

20 pieces in one carton

For: Air Drill, Electricity Drill, Cordless Drill,Drill machine

CAPACITY	steel	copper	aluminum
PC-2010	M3~M8	M3~M12	M3~M12
PC-901	M3~M6	M3~M8	M3~M8

QE-231

SPOT DRILL & HOOK

Air inlet : 1/4"

6 pieces in one carton

- 8 mm drill bit included
- 6.5,8,10 mm drill are available
- Adjustable chuck for easy control
- Hook is easily removed or installed.
- High quality piston improves torque and efficiency
- Common applications are remove the surface of the solder joints and will not damage steel plate.
- Maximum drill depth: 4.5 mm, steel: 3.8 mm stainless

	Chuck Size inch(mm)	Free Speed R.P.M	Motor hp	Stall Torque N.m	Overall Length inch(mm)	Avg. Air Consumption CFM (L/min)	Air Pressure PSI (bar)	Net Weight LBS	Net Weight kg	Air Hose Inch	Sound Pressure dBA	Vibration Level m/s²
QE-231	5/16"(8)	1600	0.50	12.36	6.0(170)	90(6.3)	9-1/4"(235)	4.4	2.0	3/8"	88.2	0.1

REPAIR KIT

QE-331K01	Key Chuck	Keyless Chuck	Rotor Blade	O-Ring	Muffler	Pin	Planet Gear	Key
		■	■				■	
	Internal Gear	Reduction Spindle	Pinion Gear	Main Gear	Screw	Planet Pin	Working Spindle	
						■	■	
QE-332K01	Key Chuck	Keyless Chuck	Rotor Blade	O-Ring	Muffler	Pin	Planet Gear	Key
		■	■				■	
	Internal Gear	Reduction Spindle	Pinion Gear	Main Gear	Screw	Planet Pin	Working Spindle	
	■					■	■	
QE-333K01	Key Chuck	Keyless Chuck	Rotor Blade	O-Ring	Muffler	Pin	Planet Gear	Key
	■		■				■	
	Internal Gear	Reduction Spindle	Pinion Gear	Main Gear	Screw	Planet Pin	Working Spindle	
						■	■	
QE-334K01	Key Chuck	Keyless Chuck	Rotor Blade	O-Ring	Muffler	Pin	Planet Gear	Key
	■		■				■	
	Internal Gear	Reduction Spindle	Pinion Gear	Main Gear	Screw	Planet Pin	Working Spindle	
	■					■	■	
QE-341K01	Key Chuck	Keyless Chuck	Rotor Blade	O-Ring	Muffler	Pin	Planet Gear	Key
		■	■				■	
	Internal Gear	Reduction Spindle	Pinion Gear	Main Gear	Screw	Planet Pin	Working Spindle	
		■	■			■	■	
QE-343K01	Key Chuck	Keyless Chuck	Rotor Blade	O-Ring	Muffler	Pin	Planet Gear	Key
	■		■				■	
	Internal Gear	Reduction Spindle	Pinion Gear	Main Gear	Screw	Planet Pin	Working Spindle	
		■	■			■	■	
QE-431K01	Key Chuck	Keyless Chuck	Rotor Blade	O-Ring	Muffler	Pin	Planet Gear	Key
		■	■	■	■	■	■	
	Internal Gear	Reduction Spindle	Pinion Gear	Main Gear	Screw	Planet Pin	Working Spindle	
QE-433K01	Key Chuck	Keyless Chuck	Rotor Blade	O-Ring	Muffler	Pin	Planet Gear	Key
			■	■	■	■	■	
	Internal Gear	Reduction Spindle	Pinion Gear	Main Gear	Screw	Planet Pin	Working Spindle	
QE-441K01	Key Chuck	Keyless Chuck	Rotor Blade	O-Ring	Muffler	Pin	Planet Gear	Key
		■	■	■	■	■	■	
	Internal Gear	Reduction Spindle	Pinion Gear	Main Gear	Screw	Planet Pin	Working Spindle	
				■	■		■	
QE-443K01	Key Chuck	Keyless Chuck	Rotor Blade	O-Ring	Muffler	Pin	Planet Gear	Key
			■	■	■	■	■	
	Internal Gear	Reduction Spindle	Pinion Gear	Main Gear	Screw	Planet Pin	Working Spindle	
				■	■		■	
QE-833K01	Key Chuck	Keyless Chuck	Rotor Blade	O-Ring	Muffler	Pin	Planet Gear	Key
	■							■
	Internal Gear	Reduction Spindle	Pinion Gear	Main Gear	Screw	Planet Pin	Working Spindle	

AIR SCREWDRIVER

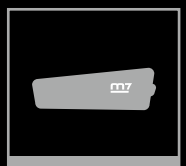

★★ Excellent ★ Good

Joint & Torque Curve	Clutch Type	Model Number					
		M3	M3.5	M4	M5	M6	M8
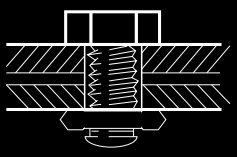 Free Running / Hard stop/soft stop	★★ Shut-off Screwdriver	RA-3023	RA-3017	RA-3011	RA-4008		
			RA-3123	RA-4015	RA-5005		
				RA-4021	RA-5008		
				RA-5017	RA-4108		
				RA-3111	RA-4115		
				RA-3117	RA-5015		
				RA-4121	RA-5108		
					RA-5117		
	★ Adjustable Clutch			RA-1131	RA-1151	RA-802	
				RA-1132	RA-2161	RA-302	
				RA-1141			
				RA-1142			
				RA-1162			
				RA-301			
				RA-801			
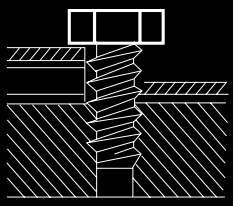 Self-Tapping / Thick Material Sheet Metal	★★ Adjustable Clutch			RA-1131	RA-1151	RA-802	
				RA-1132	RA-2161	RA-302	
				RA-1141			
				RA-1142			
				RA-1162			
				RA-301			
				RA-801			
	★ Twin Dog & Twin Hammer			RA-1232	RA-2242	RA-606	RA-2272
				RA-1242	RA-102	RA-201	RA-608
				RA-101		RA-110	RA-1272
				RA-101C		RA-105	RA-111
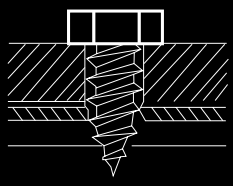 Self-Tapping / Plastic	★★ Adjustable Clutch			RA-1131	RA-1151	RA-802	
				RA-1132	RA-2161	RA-302	
				RA-1141			
				RA-1142			
				RA-1162			
				RA-301			
				RA-801			
	★ Twin Dog			RA-1232	RA-2242	RA-606	RA-2272
				RA-1242	RA-102	RA-201	RA-608
				RA-101		RA-105	RA-1272
				RA-101C			
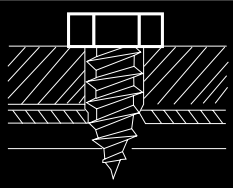 Wood screws	★★ Positive Clutch					RA-811	
						RA-402	
	★ Twin Dog			RA-1232	RA-2242	RA-606	RA-2272
				RA-1242	RA-102	RA-201	RA-608
				RA-101		RA-105	RA-1272
				RA-101C			

AIR SCREWDRIVER

Clutch Type Series
Extmal Adjustment

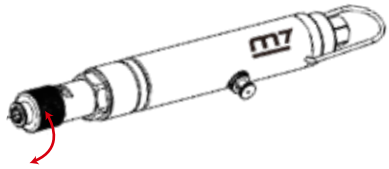

RA-1131
AIR SCREWDRIVER ADJUSTABLE CLUTCH

Screw Capacity : M4
Air inlet : 1/4"

10 pieces in one carton

9.5mm

Quick Chuck

RA-1141
AIR SCREWDRIVER ADJUSTABLE CLUTCH

Screw Capacity : M4
Air inlet : 1/4"

10 pieces in one carton

9.5mm

Quick Chuck

RA-1151
AIR SCREWDRIVER ADJUSTABLE CLUTCH

Screw Capacity : M5
Air inlet : 1/4"

10 pieces in one carton

9.5mm

Quick Chuck

RA-2161
AIR SCREWDRIVER ADJUSTABLE CLUTCH

Screw Capacity : M5
Air inlet : 1/4"

10 pieces in one carton

9.5mm

Quick Chuck

RA-801EA
AIR SCREWDRIVER EXTERNAL ADHUSTABLE

Screw Capacity : M4
Air inlet : 1/4"

10 pieces in one carton

9.5mm

Quick Chuck

	Bit Size inch(mm)	Torque Range FT-LB(Nm)	Free Speed R.P.M	Avg. Air Consumption CFM (L/min)	Air Pressure PSI (bar)	Overall Length Inch (mm)	Net Weight LBS	Net Weight kg	Air Hose Inch	Sound Pressure dBA	Vibration Level m/s²
RA-1131	1/4"(6.35)	0.7-2.9(1-4)	1800	4.5(127)	90(6.3)	9"(228)	1.6	0.76	3/8"	80.0	2.3
RA-1141	1/4"(6.35)	0.7-2.2(1-3)	800	4.5(127)	90(6.3)	8-7/8"(226)	1.6	0.76	3/8"	80.0	2.3
RA-1151	1/4"(6.35)	1.4-3.7(2-5)	1900	4.5(127)	90(6.3)	9-1/32"(229)	2.2	1.01	3/8"	85.0	2.3
RA-2161	1/4"(6.35)	1.4-3.7(2-5)	750	7.5(212)	90(6.3)	7-15/32"(190)	2.0	1.00	3/8"	80.0	2.0
RA-801EA	1/4"(6.35)	3.8-10.4(5-14)	2100	4.0(113)	90(6.3)	9"(230)	3.0	1.39	3/8"	90.0	4.2

Impact Type Series

Twin Dog Type

RA-101C-Chuck-Type

RA-101
RA-101C

AIR SCREWDRIVER (Twin Dog Type)

Screw Capacity : M4
Air inlet : 1/4"

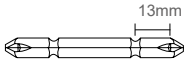

20 pieces in one carton

RA-102

AIR SCREWDRIVER (Twin Dog Type)

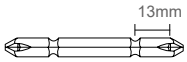

Screw Capacity : M5
Air inlet : 1/4"

20 pieces in one carton

RA-105

AIR SCREWDRIVER (Twin Dog Type)

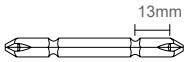

Screw Capacity : M6
Air inlet : 1/4"

12 pieces in one carton

RA-110

AIR SCREWDRIVER (Twin Hammer Type)

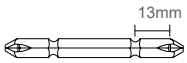

Screw Capacity : M6
Air inlet : 1/4"

12 pieces in one carton

RA-1232

AIR SCREWDRIVER (Twin Dog Type)

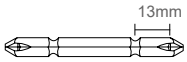

Screw Capacity : M4
Air inlet : 1/4"

10 pieces in one carton

	Bit Size inch(mm)	Torque Range FT-LB(Nm)	Free Speed R.P.M	Avg. Air Consumption CFM (L/min)	Air Pressure PSI (bar)	Overall Length Inch (mm)	Net Weight LBS	Net Weight kg	Air Hose Inch	Sound Pressure dBA	Vibration Level m/s²
RA-101	1/4"(6.35)	3.7-8.9(5-12)	9000	6.0(170)	90(6.3)	6-1/2"(166)	1.32	0.6	3/8"	85.7	2.2
RA-102	1/4"(6.35)	3.7-10.3(5-14)	9000	6.0(170)	90(6.3)	6-3/4"(172)	1.54	0.7	3/8"	86.7	3.7
RA-105	1/4"(6.35)	3.7-16.2(5-22)	8500	8.5(241)	90(6.3)	8-1/4"(208)	2.20	1.0	3/8"	96.7	4.9
RA-110	1/4"(6.35)	3.7-29.5(5-40)	8500	8.5(241)	90(6.3)	8-1/4"(208)	2.20	1.0	3/8"	96.7	4.9
RA-1232	1/4"(6.35)	11~22 (15-30)	9000	4.5(127)	90(6.3)	7-11/16"(195)	1.47	0.67	3/8"	80.0	3.2

AIR SCREWDRIVER

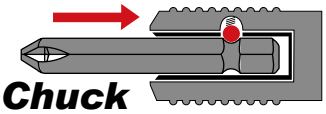

Quick Chuck

RA-1242

AIR SCREWDRIVER
(Twin Dog Type)

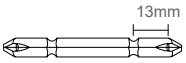

Screw Capacity : M4
Air inlet : 1/4"

10 pieces in one carton

RA-1272

AIR SCREWDRIVER
(Twin Dog Type)

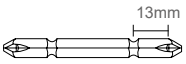

Screw Capacity : M8
Air inlet : 1/4"

10 pieces in one carton

RA-201

AIR SCREWDRIVER
(Twin Dog Type)

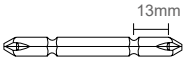

Screw Capacity : M8
Air inlet : 1/4"

8 pieces in one carton

RA-606

AIR SCREWDRIVER
(Twin Dog Type)

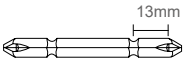

Screw Capacity : M6
Air inlet : 1/4"

12 pieces in one carton

RA-608

AIR SCREWDRIVER
(Twin Dog Type)

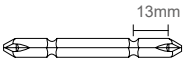

Screw Capacity : M8
Air inlet : 1/4"

12 pieces in one carton

	Bit Size inch(mm)	Torque Range FT-LB(Nm)	Free Speed R.P.M	Avg. Air Consumption CFM (L/min)	Air Pressure PSI (bar)	Overall Length Inch (mm)	Net Weight LBS	Net Weight kg	Air Hose Inch	Sound Pressure dBA	Vibration Level m/s²
RA-1242	1/4"(6.35)	14~22 (19~30)	12500	5.0(141)	90(6.3)	6-11/16"(170)	1.25	0.57	3/8"	89.0	3.9
RA-1272	1/4"(6.35)	44-177(60-240)	8000	9.0(255)	90(6.3)	7-27/32"(200)	2.30	1.06	3/8"	97.0	5.1
RA-201	1/4"(6.35)	3.7-18.5(5-25)	10000	9.0(255)	90(6.3)	7"(180)	2.65	1.2	3/8"	93.0	5.3
RA-606	1/4"(6.35)	3.7-33.2(5-45)	8000	5.6(160)	90(6.3)	7-4/5"(198)	2.2	1.0	3/8"	82.0	2.2
RA-608	1/4"(6.35)	3.7-42.8(5-58)	8000	4.6(130)	90(6.3)	8-9/16"(217)	2.86	1.3	3/8"	86.0	3.5

RA-2242

AIR Screwdriver (Twin Dog Type)

Screw Capacity : M5
Air inlet : 1/4"

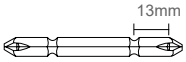

10 pieces in one carton

RA-2272

AIR Screwdriver (Twin Dog Type)

Screw Capacity : M8
Air inlet : 1/4"

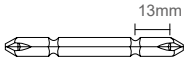

10 pieces in one carton

Clutch Type Series

Internal Adjustment

- Clockwise direction to increase torque
- Counterclockwise direction to decrease torque

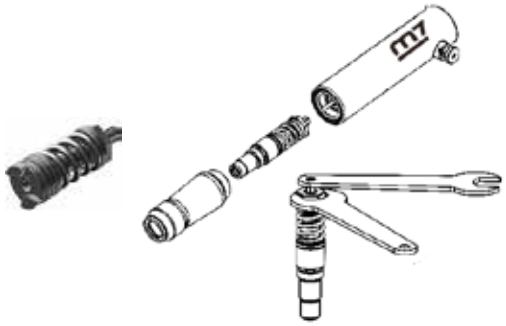

RA-1132

AIR AIR SCREWDRIVER ADJUSTABLE CLUTCH

Screw Capacity : M4
Air inlet : 1/4"

10 pieces in one carton

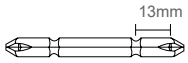

RA-1142

AIR SCREWDRIVER ADJUSTABLE CLUTCH

Screw Capacity : M4
Air inlet : 1/4"

10 pieces in one carton

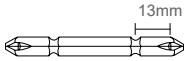

RA-1162

AIR SCREWDRIVER ADJUSTABLE CLUTCH

Screw Capacity : M6
Air inlet : 1/4"

10 pieces in one carton

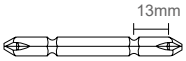

	Bit Size inch(mm)	Torque Range FT-LB(Nm)	Free Speed R.P.M	Avg. Air Consumption CFM (L/min)	Air Pressure PSI (bar)	Overall Length Inch (mm)	Net Weight LBS	Net Weight kg	Air Hose Inch	Sound Pressure dBA	Vibration Level m/s²
RA-2242	1/4"(6.35)	18~26(24.4-35.2)	13000	7.0(198)	90(6.3)	5-15/16"(150)	2.0	0.9	3/8"	88.0	2.7
RA-2272	1/4"(6.35)	44~177(59-240)	7700	8.5(240)	90(6.3)	7-11/16"(195)	3.0	1.38	3/8"	93.0	4.9
RA-1132	1/4"(6.35)	0.7~2.2(1-3)	2200	6.0(170)	90(6.3)	9-7/32"(235)	1.7	0.8	3/8"	80.0	2.3
RA-1142	1/4"(6.35)	0.7~2.2(1-3)	1700	5.0(141)	90(6.3)	9-7/32"(235)	1.34	0.61	3/8"	80.0	2.0
RA-1162	1/4"(6.35)	1.5~5.9(2-8)	600	6.0(170)	90(6.3)	10-7/16"(265)	2.1	0.95	3/8"	90.0	2.2

AIR SCREWDRIVER

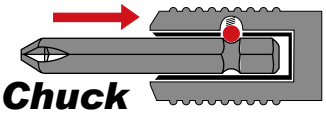

Quick Chuck

RA-301

AIR SCREWDRIVER ADJUSTABLE CLUTCH

Screw Capacity : M4
Air inlet : 1/4"

10 pieces in one carton

RA-302

AIR Screwdriver Adjustable Clutch

Screw Capacity : M6
Air inlet : 1/4"

10 pieces in one carton

RA-801

AIR SCREWDRIVER ADJUSTABLE CLUTCH

Screw Capacity : M4
Air inlet : 1/4"

10 pieces in one carton

RA-802

AIR SCREWDRIVER ADJUSTABLE CLUTCH

Screw Capacity : M6
Air inlet : 1/4"

10 pieces in one carton

Positive Clutch Type Non - Adjustable

RA-402

AIR SCREWDRIVER (Positive Clutch Type)

Screw Capacity : M6
Air inlet : 1/4"

10 pieces in one carton

RA-811

AIR SCREWDRIVER (Positive Clutch Type)

Screw Capacity : M6
Air inlet : 1/4"

10 pieces in one carton

	Bit Size inch(mm)	Torque Range FT-LB(Nm)	Free Speed R.P.M	Avg. Air Consumption CFM (L/min)	Air Pressure PSI (bar)	Overall Length Inch (mm)	Net Weight LBS	Net Weight kg	Air Hose Inch	Sound Pressure dBA	Vibration Level m/s²
RA-301	1/4"(6.35)	3.8-10(5-13.5)	1800	6.0(170)	90(6.3)	7-1/2"(190)	2.40	1.1	3/8"	95.3	4.2
RA-302	1/4"(6.35)	3.8-12(5-16.3)	800	6.0(170)	90(6.3)	9"(226)	2.87	1.3	3/8"	96.5	2.2
RA-801	1/4"(6.35)	3.8-10.4(5-14)	1800	4.0(113)	90(6.3)	7-3/4"(195)	2.70	1.22	3/8"	83.0	4.2
RA-802	1/4"(6.35)	3.8-13.3(5-18)	800	4.0(113)	90(6.3)	8-9/32"(210)	2.80	1.30	3/8"	83.0	4.2
RA-402	1/4"(6.35)	5-14(6~19)	2200	3.9(111)	90(6.3)	7-3/32"(180)	2.47	1.1	3/8"	91.0	2.3
RA-811	1/4"(6.35)	5.0-13.0(6-17)	2100	4.0(113)	90(6.3)	7"(178)	2.50	1.13	3/8"	83.0	3.7

Torque Control or Shut-off

RA-31/RA-41/RA-51 SERIES

SHUT-OFF SCREWDRIVER
Air inlet : 1/4"

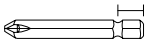

RA-30/RA-40/RA-50 SERIES

SHUT-OFF SCREWDRIVER
Air inlet : 1/4"

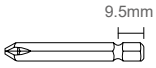

Reversible

- Proved by the life-time tester, these items can be operated continuously up to 1.5 million times.
- Industrial grade, excellent for long continous operation on various mass production lines..
- Low noise and vibration rate, high adjustable accuracy up to + - 5%.

12 pieces in one carton

ZT-31

DIGITAL TORQUE TESTER
Torque Range 0~14.7Nm

	Chuck Size inch(mm)	Torque Range IN-LB(N,m)	Free Speed R.P.M	Avg. Air Consumption CFM (L/min)	Air Pressure PSI (bar)	Overall Length Inch (mm)	Net Weight LBS	Net Weight kg	Air Hose Inch	Sound Pressure dBA	Vibration Level m/s²
RA-3011	1/4"(6.35)	9.7-18.6(1.1-2.1)	1100	3.2(90.6)	90(6.3)	7-3/8"(187)	0.94	0.42	1/4"	70.0	2.0
RA-3017	1/4"(6.35)	6.2-13.3(0.7-1.5)	1700	3.2(90.6)	90(6.3)	7-3/8"(187)	0.94	0.42	1/4"	70.0	2.0
RA-3023	1/4"(6.35)	3.5-8.8(0.4-1.0)	2300	3.2(90.6)	90(6.3)	7-3/8"(187)	0.94	0.42	1/4"	70.0	2.0
RA-4008	1/4"(6.35)	14.1-35.4(1.6-4.0)	800	3.7(104.8)	90(6.3)	8-1/4"(209)	1.43	0.65	1/4"	74.0	2.5
RA-4015	1/4"(6.35)	8.8-19.5(1.0-2.2)	1500	3.7(104.8)	90(6.3)	8-1/4"(209)	1.43	0.65	1/4"	74.0	2.5
RA-4021	1/4"(6.35)	8.8-15(1.0-1.7)	2100	3.7(104.8)	90(6.3)	8-1/4"(209)	1.43	0.65	1/4"	74.0	2.5
RA-5005	1/4"(6.35)	44.2-92.9(5.0-10.5)	480	4.0(113)	90(6.3)	9-1/2"(240)	2.2	1.0	3/8"	75.0	10
RA-5008	1/4"(6.35)	26.5-48.7(3.0-5.5)	800	4.0(113)	90(6.3)	9-1/2"(240)	2.2	1.0	3/8"	75.0	10
RA-5017	1/4"(6.35)	13.3-23.0(1.5-2.6)	1700	4.0(113)	90(6.3)	9-1/2"(240)	2.2	1.0	3/8"	75.0	10
RA-3111	7/64"(2.6)	9.7-18.5(1.1-2.1)	1100	7.0(198)	90(6.3)	6-11/16"(170)	1.57	0.71	1/4"	82.0	0.73
RA-3117	1/4"(6.35)	6.2-13.2(0.7-1.5)	1700	7.0(198)	90(6.3)	6-11/16"(170)	1.57	0.71	1/4"	84.0	1.51
RA-3123	1/4"(6.35)	3.5-8.8(0.4-1.0)	2300	7.0(198)	90(6.3)	6-11/16"(170)	1.57	0.71	1/4"	84.0	1.34
RA-4108	1/4"(6.35)	14.1-35.2(1.6-4.0)	800	10.5(297)	90(6.3)	6-15/16"(175)	1.92	0.87	1/4"	87.5	1.18
RA-4115	1/4"(6.35)	8.8-19.4(1.0-2.2)	1500	10.5(297)	90(6.3)	6-15/16"(175)	1.92	0.87	1/4"	85.5	1.59
RA-4121	1/4"(6.35)	8.8-13.2(1.0-1.7)	2100	10.5(297)	90(6.3)	6-15/16"(175)	1.92	0.87	1/4"	86.8	1.61
RA-5105	1/4"(6.35)	44-92.4(5.0-10.5)	480	17.5(496)	90(6.3)	7-4/5"(198)	2.65	1.20	1/4"	93.1	0.48
RA-5108	1/4"(6.35)	26.4-48.4(3.0-5.5)	800	17.5(496)	90(6.3)	7-4/5"(198)	2.65	1.20	1/4"	93.6	0.93
RA-5117	1/4"(6.35)	13.2-23(1.5-2.6)	1700	17.5(496)	90(6.3)	7-4/5"(198)	2.65	1.20	1/4"	93.6	1.35

REPAIR KIT

RA-101K01
RA-102K01

Anvil	Hammer	Hammer Dowel	Keyless Chuck Ass'y	Band	Steel Ball	Rotor Blade	Working Spindle	Hammer Cam
■	■	■				■		
Driving Dog	Ball Retainer	Spring	Washer	Planet Gear	Planet Pin	Retaining Ring	Hammer Cage	
	■							

RA-105K01

Anvil	Hammer	Hammer Dowel	Keyless Chuck Ass'y	Band	Steel Ball	Rotor Blade	Working Spindle	Hammer Cam
■	■	■	■			■		■
Driving Dog	Ball Retainer	Spring	Washer	Planet Gear	Planet Pin	Retaining Ring	Hammer Cage	
							■	

RA-110K01

Anvil	Hammer	Hammer Dowel	Keyless Chuck Ass'y	Band	Steel Ball	Rotor Blade	Working Spindle	Hammer Cam
■	■	■	■			■		
Driving Dog	Ball Retainer	Spring	Washer	Planet Gear	Planet Pin	Retaining Ring	Hammer Cage	
								■

RA-201K01

Anvil	Hammer	Hammer Dowel	Keyless Chuck Ass'y	Band	Steel Ball	Rotor Blade	Working Spindle	Hammer Cam
■	■	■	■			■		
Driving Dog	Ball Retainer	Spring	Washer	Planet Gear	Planet Pin	Retaining Ring	Hammer Cage	

RA-302K01

Anvil	Hammer	Hammer Dowel	Keyless Chuck Ass'y	Band	Steel Ball	Rotor Blade	Working Spindle	Hammer Cam
						■	■	
Driving Dog	Ball Retainer	Spring	Washer	Planet Gear	Planet Pin	Retaining Ring	Hammer Cage	
■	■	■	■	■	■	■		

RA-3011K01

Anvil	Hammer	Hammer Dowel	Keyless Chuck Ass'y	Band	Steel Ball	Rotor Blade	Working Spindle	Hammer Cam
				■	■			
Driving Dog	Ball Retainer	Spring	Washer	Planet Gear	Planet Pin	Retaining Ring	Hammer Cage	

RA-3017K01
RA-3023K01

Anvil	Hammer	Hammer Dowel	Keyless Chuck Ass'y	Band	Steel Ball	Rotor Blade	Working Spindle	Hammer Cam
				■	■	■		
Driving Dog	Ball Retainer	Spring	Washer	Planet Gear	Planet Pin	Retaining Ring	Hammer Cage	

RA-4008K01
RA-4015K01
RA-4021K01

Anvil	Hammer	Hammer Dowel	Keyless Chuck Ass'y	Band	Steel Ball	Rotor Blade	Working Spindle	Hammer Cam
				■	■	■		
Driving Dog	Ball Retainer	Spring	Washer	Planet Gear	Planet Pin	Retaining Ring	Hammer Cage	

RA-5005K01
RA-5008K01
RA-5017K01

Anvil	Hammer	Hammer Dowel	Keyless Chuck Ass'y	Band	Steel Ball	Rotor Blade	Working Spindle	Hammer Cam
				■	■			
Driving Dog	Ball Retainer	Spring	Washer	Planet Gear	Planet Pin	Retaining Ring	Hammer Cage	

SPRING BALANCER

SP-3400
SP-3500

- Spiral design.
- Increasing screw diameter is balanced by increasing spring force so that the output force is balanced and the tool stops at wherever it is pulled.

SPRING BALANCER

2 pieces in one carton

SP-3400 / 3500
unit:mm

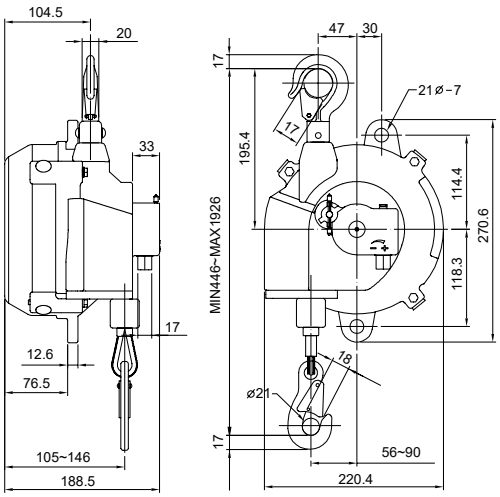

SP-3600 SP-3900
SP-3700 SP-31050 SP-31200

- Spiral design.
- Increasing screw diameter is balanced by increasing spring force so that the output force is balanced and the tool stops at wherever it is pulled.

SPRING BALANCER

2 pieces in one carton

SP-3600 / SP-3700

1 pieces in one carton

SP-3900 / SP-31050 / SP-31200

SP-3600 / 3700 / 3900 / 31050 / 31200
unit:mm

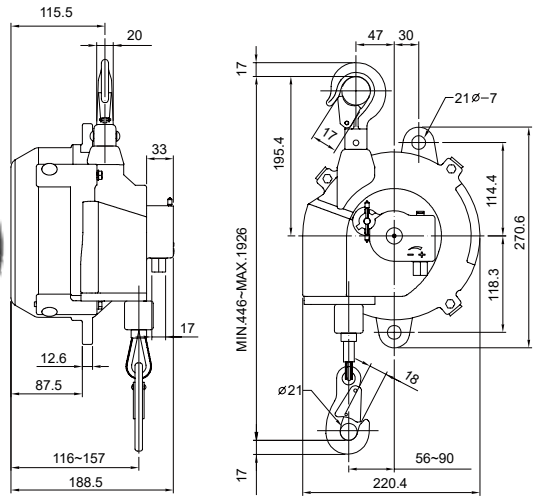

	Capacity Kg	Travel m	Rope	Rope Dia mm	Weight kg
	kg	L		∅	kg
SP-3300	22~30	1.3	Cable	4.8	8.3
SP-3400	30~40	1.5	Cable	4.8	9.7
SP-3500	40~50	1.5	Cable	4.8	10.1
SP-3600	50~60	1.5	Cable	4.8	11.1
SP-3700	60~70	1.5	Cable	4.8	11.4
SP-3900	70~90	2	Cable	4.8	22.2
SP-31050	90~105	2	Cable	4.8	23.8
SP-31200	105~120	2	Cable	4.8	27.4

SPRING BALANCER

SPRING BALANCER

SP-101/102
SP-103/104
SP-105/111
SP-112/113

SPRING BALANCER

30 pieces in one carton

SP-212
SP-213

Spring Balancer

30 pieces in one carton

SP-3050/3070

10 pieces in one carton

SP-3090/3150

4 pieces in one carton

SP-3220/3300

2 pieces in one carton

SPRING BALANCER

SP-3050-3070
unit:mm

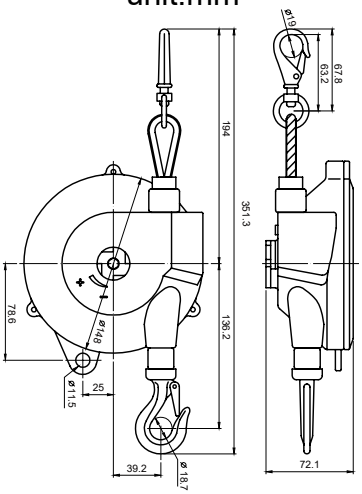

SP-3090-3150
unit:mm

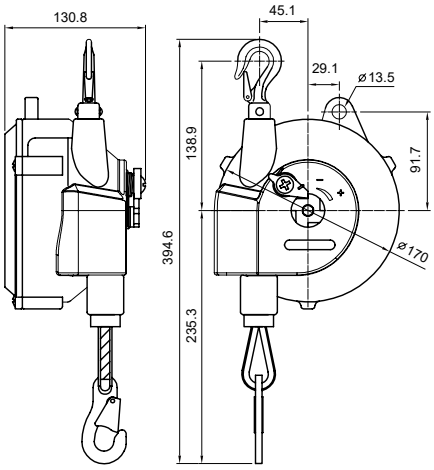

- Spiral design.
  Increasing screw diameter is balanced by increasing spring force so that
- the output force is balanced and the tool stops at wherever it is pulled.

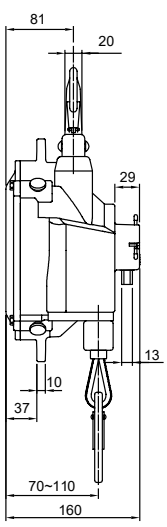

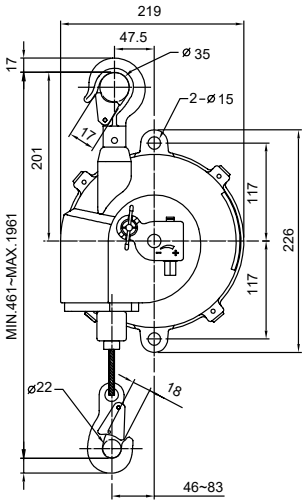

SP-3220/3300
unit:mm

	Capacity Kg	Travel m	Rope	Rope Dia mm	Weight kg
SP-101	0.3~0.8	1.4	Cable	2.5	0.49
SP-102	0.6~1.5	1.4	Cable	2.5	0.52
SP-103	1.0~2.0	1.4	Cable	2.5	0.53
SP-104	1.5~3.0	1.4	Cable	3.2	0.76
SP-105	3.0~5.0	1.4	Cable	3.2	0.81
SP-111	0.3~0.8	1.4	Nylon	4.0	0.49
SP-112	0.6~1.5	1.4	Nylon	4.0	0.52
SP-113	1.0~2.0	1.4	Nylon	4.0	0.53
SP-212	0.3~1.2	1.6	Nylon	4.0	0.57
SP-213	0.8~2.0	1.6	Nylon	4.0	0.57
SP-3050	3.0~5.0	1.3	Cable	3.2	1.82
SP-3070	5.0~7.0	1.3	Cable	3.2	1.85
SP-3090	5.0~9.0	1.3	Cable	4.0	3.59
SP-3150	9.0~15.0	1.3	Cable	4.0	3.61
SP-3220	15.0~22.0	1.3	Cable	4.8	7.7
SP-3300	22.0~30.0	1.3	Cable	4.8	8.3

AIR HAMMER

AIR HAMMER

Repair kit

SC-211 SC-212 SC-222	1. Piston 2. Chisel Limitator 3. Valve Ass'y

SC-331C
AIR HAMMER ROUND SHANK

SC-341C
AIR HAMMER HEX SHANK

LOW VIBRATION AIR HAMMER

SC-4 chisel kit is provided along with the tool.

Air inlet : 1/4"

10 pieces in one carton

Compare With ordinary models

- Vibration-reduced grip
- Reduce vibration by controlling air passage

SC-332C
AIR HAMMER ROUND SHANK

SC-342C
AIR HAMMER HEX SHANK

LOW VIBRATION AIR HAMMER

Air inlet : 1/4"

10 pieces in one carton

SC-4 chisel kit is provided along with the tool.

SC-211C
AIR HAMMER ROUND SHANK

SC-221C
AIR HAMMER HEX SHANK

Air inlet : 1/4"

8 pieces in one carton

SC-4 chisel kit is provided along with the tool.

SC-212C
AIR HAMMER ROUND SHANK

SC-222C
AIR HAMMER HEX SHANK

Air inlet : 1/4"

8 pieces in one carton

SC-4 chisel kit is provided along with the tool.

SN-1032
AIR FLUX CHIPPER

Air inlet : 1/4"

12 pieces in one carton

include the chisel

SC-05C[SET] / 06C[SET]

- 1pc- Air Hammer (Various Selections)
- 5pcs-Chisel Kits
- 1pc- Spring Retainer

Item No.	Shank	Contents
SC-0517C	Round Shank	SC-211C
SC-0527C	Round Shank	SC-212C

Item No.	Shank	Contents
SC-0617C	Hex Shank	SC-221C
SC-0627C	Hex Shank	SC-222C

5 pieces in one carton

SC-33C/34C

NEEDLE SCALER ADAPTOR FOR AIR HAMMER TOOLS USE ROUND / HEX

19pcs ⦸3mmx180mm

Item No.	Shank	Contents
SC-33C	Round Shank	SC-211
SC-34C	Hex Shank	SC-221

20 pieces in one carton

● SC-33C - / Round ⬢ SC-34C - / Hex

SN-9101/9103
SN-9201/9203

Chisel For SN-31/SN-32 SERIES

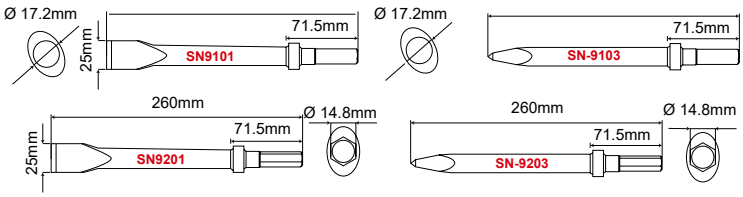

	Shank	Chuck Size inch(mm)	Stroke Length mm	Blow Minute bpm	Avg. Air Consumption CFM (L/min)	Air Pressure PSI (bar)	Overall Length Inch (mm)	Net Weight LBS	Net Weight kg	Air Hose Inch	Sound Pressure dBA	Vibration Level m/s²
SC-211C	●	0.401(10.2)	67	3200	4.0(113)	90(6.3)	6-7/8"(175)	3.7	1.7	3/8"	98.0	12.3
SC-221C	⬢	0.393(10)	67	3200	4.0(113)	90(6.3)	6-7/8"(175)	3.7	1.7	3/8"	98.0	12.3
SC-212C	●	0.401(10.2)	89	2200	4.0(113)	90(6.3)	8-7/8"(225)	4.4	2.0	3/8"	94.7	13.2
SC-222C	⬢	0.393(10)	89	2200	4.0(113)	90(6.3)	8-7/8"(225)	4.4	2.0	3/8"	94.7	13.2
SC-331C	●	0.401(10.2)	71	3000	7.8(220)	90(6.3)	7-31/64"(190)	3.7	1.7	3/8"	92.0	9.5
SC-332C	●	0.401(10.2)	92	2200	8.2(232)	90(6.3)	8-63/64"(228)	4.4	2.0	3/8"	94.0	10.6
SC-341C	⬢	0.393(10)	71	3000	7.8(220)	90(6.3)	7-31/64"(190)	3.7	1.7	3/8"	92	9.5
SC-342C	⬢	0.393(10)	92	2200	8.2(232)	90(6.3)	8-63/64"(228)	4.4	2.0	3/8"	94	10.6
SN-1032	■	0.51(13)	33	4000	4.23(120)	90(6.3)	11-1/2"(290)	2.9	1.33	3/8"	91.0	14.5

AIR HAMMER

SN-3111C/3112C
SN-3113C/3114C

AIR CHIPPING HAMMER

Round Shank

SN-3121C/3122C
SN-3123C/3124C

AIR CHIPPING HAMMER

Hex Shank

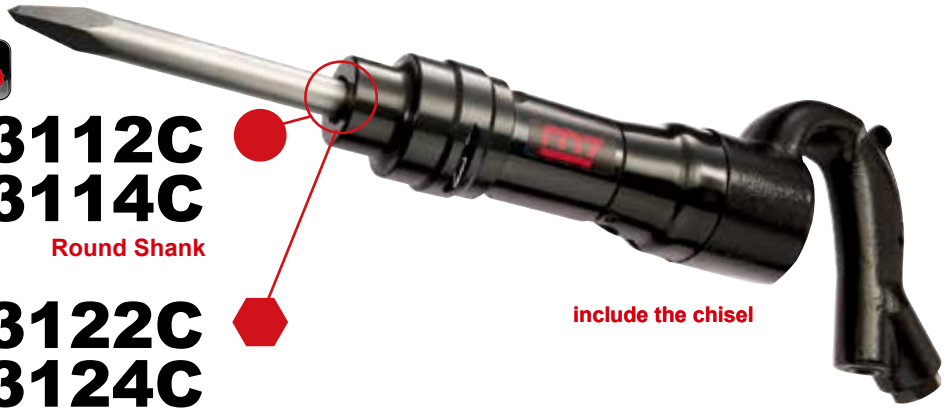

include the chisel

SN-3212C/3213C
SN-3214C

AIR CHIPPING HAMMER

Round Shank

SN-3222C/3223C
SN-3224C

AIR CHIPPING HAMMER

Hex Shank

2 pieces in one carton

include the chisel

SN-1268

AIR NEEDLE SCALER

Air inlet : 1/4"

6 pieces in one carton

SN-1288

AIR NEEDLE SCALER

Air inlet : 1/4"

10 pieces in one carton

SN-1368

AIR NEEDLE SCALER

Air inlet : 1/4"

6 pieces in one carton

- Strengthened internal parts to raise lifespan
- Strengthened front casing mechanism, not tend to wear out
- Quick accessory change for needles
- Adjust spring easily and effortlessly

50% longer lifetime

10% more Powerful

SN-2124

AIR PISTOL GRIP NEEDLE SCALER

Air inlet : 1/4"

6 pieces in one carton

SN-2128

AIR PISTOL GRIP NEEDLE SCALER

Air inlet : 1/4"

6 pieces in one carton

SN-2110

AIR PISTOL GRIP NEEDLE SCALER

Air inlet : 1/4"

6 pieces in one carton

	Shank	Chuck Size inch(mm)	Stroke Length mm	Blow Minute bpm	Avg. Air Consumption CFM (L/min)	Air Pressure PSI (bar)	Overall Length Inch (mm)	Net Weight LBS	Net Weight kg	Air Hose Inch	Sound Pressure dBA	Vibration Level m/s²
SN-3111C	●	0.68(17.2)	75	2500	10.0(283)	90(6.3)	15-1/2"(395)	15.4	7.0	1/2"	115.3	8.0
SN-3121C	⬢	0.58(14.8)	75	2500	10.0(283)	90(6.3)	15-1/2"(395)	15.4	7.0	1/2"	115.3	8.0
SN-3112C	●	0.68(17.2)	90	2300	20.0(566)	90(6.3)	16"(405)	16.1	7.3	1/2"	114.3	9.4
SN-3122C	⬢	0.58(14.8)	90	2300	20.0(566)	90(6.3)	16"(405)	16.1	7.3	1/2"	114.3	9.4
SN-3113C	●	0.68(17.2)	127	2000	22.0(622.6)	90(6.3)	17-3/4"(450)	17.6	8.0	1/2"	113.3	4.8
SN-3123C	⬢	0.58(14.8)	127	2000	22.0(622.6)	90(6.3)	17-3/4"(450)	17.6	8.0	1/2"	113.3	4.8
SN-3114C	●	0.68(17.2)	154	1600	24.0(679.2)	90(6.3)	18-1/2"(470)	18.3	8.3	1/2"	114.1	6.2
SN-3124C	⬢	0.58(14.8)	154	1600	24.0(679.2)	90(6.3)	18-1/2"(470)	18.3	8.3	1/2"	114.1	6.2
SN-3212C	●	0.68(17.2)	78	2300	20.0(566)	90(6.3)	14-5/8"(373)	17.2	7.8	1/2"	114.3	9.4
SN-3222C	⬢	0.58(14.8)	78	2300	20.0(566)	90(6.3)	14-5/8"(373)	17.2	7.8	1/2"	114.3	9.4
SN-3213C	●	0.68(17.2)	119	1900	22.0(622.6)	90(6.3)	16-1/2"(419)	18.7	8.5	1/2"	113.3	4.8
SN-3223C	⬢	0.58(14.8)	119	1900	22.0(622.6)	90(6.3)	16-1/2"(419)	18.7	8.5	1/2"	113.3	4.8
SN-3214C	●	0.68(17.2)	142	1700	24.0(679.2)	90(6.3)	17-1/2"(445)	19.4	8.8	1/2"	114.1	6.2
SN-3224C	⬢	0.58(14.8)	142	1700	24.0(679.2)	90(6.3)	17-1/2"(445)	19.4	8.8	1/2"	114.1	6.2

	Needle Diameter mm	Numbers of Needle inch(mm)	Stroke Length mm	Blow Per Minute bpm	Avg. Air Consumption CFM (L/min)	Air Pressure PSI (bar)	Overall Length Inch (mm)	Net Weight LBS	Net Weight kg	Air Hose Inch	Sound Pressure dBA	Vibration Level m/s²
SN-1268	3x180	19	28	4600	15(424)	90(6.3)	18-1/8"(460)	6.2	2.80	3/8"	91.0	13.7
SN-1288	3x125	12	32	5500	3(85)	90(6.3)	11-3/8"(290)	2.9	1.30	3/8"	86.0	7.7
SN-1368	3x180	19	27	3400	16(453)	90(6.3)	17"(430)	5.9	2.70	3/8"	91.0	13.7
SN-2110	3x180	19	33	3700	15(424)	90(6.3)	13"(330)	6.1	2.80	3/8"	97.0	9.7
SN-2128	3x180	19	28	3500	7.4(198)	90(6.3)	13-9/16"(335)	6.2	2.80	3/8"	100.0	8.1
SN-2124	3x180	23	27	4000	7.4(209)	90(6.3)	13-9/16"(350)	7.9	3.60	3/8"	99.0	14.8

AIR HYDRAULIC RIVETER

AIR HYDRAULIC RIVETER

ITEM	MATERIAL		RIVET DIAMETER(ØMM)						
			(2.5)	(3.0)	4.0	(5.0)	6.4	7.2	8.0
RIVET	RIVET	MANDREL	2.4	3.2		4.8			
PA-111	aluminum	aluminum							
	aluminum	steel							
	steel	steel							
	stainless	steel							
	stainless	stainless							
PA-201	aluminum	aluminum							
	aluminum	steel							
	steel	steel							
	stainless	steel							
	stainless	stainless							
PA-201V	aluminum	aluminum							
	aluminum	steel							
	steel	steel							
	stainless	steel							
	stainless	stainless							
PA-211	aluminum	aluminum							
	aluminum	steel							
	steel	steel							
	stainless	steel							
	stainless	stainless							
PA-203N	aluminum	aluminum							
	aluminum	steel							
	steel	steel							
	stainless	steel							
	stainless	stainless							
PA-301	aluminum	aluminum							
	aluminum	steel							
	steel	steel							
	stainless	steel							
	stainless	stainless							
PA-301V	aluminum	aluminum							
	aluminum	steel							
	steel	steel							
	stainless	steel							
	stainless	stainless							
PA-321	aluminum	aluminum							
	aluminum	steel							
	steel	steel							
	stainless	steel							
	stainless	stainless							
PA-202	aluminum	aluminum							
	aluminum	steel							
	steel	steel							
	stainless	steel							
	stainless	stainless							
PA-312	aluminum	aluminum							
	aluminum	steel							
	steel	steel							
	stainless	steel							
	stainless	stainless							
PA-401V	aluminum	aluminum							
	aluminum	steel							
	steel	steel							
	stainless	steel							
	stainless	stainless							
PA-211ts	aluminum	aluminum							
	aluminum	steel							
	steel	steel							
	stainless	steel							
	stainless	stainless							

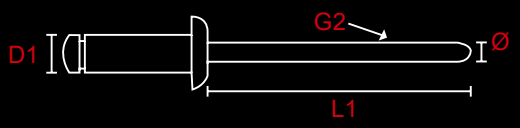

Hydramlic cylinder Recommended Oil

SHELL Tellus NO.46
ESSO Teresso NO.46
MOBIL D.T.E 25 oil
USM Spec NO.300B Oil
CPC Circulation Oil R68

	Rivet (D1)	Mandrel (L1)	Rivet Dia. (Ø)
Blind Rivet	2.4mm	above27mm	1.42~1.51(G2)
	3.2mm	above28mm	1.83~1.92(G2)
	4.0mm	above29mm	2.28~2.42(G2)
	4.8mm	above30mm	2.64~2.91(G2)
	6.4mm	above30mm	3.84~4.15(G2)
PA-211TS	6.4mm	above40mm	3.84~4.15(G2)
	8.0mm	above40mm	4.35~4.65(G2)

AIR HYDRAULIC RIVETER

Repair kit

PA-201V

1. Jaw Housing
2. Jaw Pusher
3. JAw Case Spring
4. Rivet Nose (6 pcs/set)
5. Jaw
6. PU Hose
7. O-Ring

Repair kit

PA-301

1. Jaw Housing
2. Jaw Pusher
3. JAw Case Spring
4. Rivet Nose (4 pcs/set)
5. Jaw

PA-MC

AUTOMATIC MANDREL COLLECTION

CONTENTS

3/32"(2.4mm) 220pcs
1/8" (3.2mm) 160pcs
5/32"(4.0mm) 110pcs
3/16"(4.8mm) 80pcs

PE-MC

AUTOMATIC MANDREL COLLECTION

PA-111

AIR HYDRAULIC RIVETER Air inlet : 1/4"

3 pieces in one carton

PA-201

AIR HYDRAULIC RIVETER Air inlet : 1/4"

6 pieces in one carton

PA-211

AIR HYDRAULIC RIVETER Air inlet : 1/4"

6 pieces in one carton

PA-301

AIR HYDRAULIC RIVETER Air inlet : 1/4"

10 pieces in one carton

PA-321

AIR HYDRAULIC RIVETER Air inlet : 1/4"

6 pieces in one carton

PA-201V

AIR HYDRAULIC RIVETER Air inlet : 1/4"
Vaccum Type

6 pieces in one carton

PA-301V

AIR HYDRAULIC RIVETER Air inlet : 1/4"
Vacuum Type

6 pieces in one carton

PA-401V

AIR HYDRAULIC RIVETER Air inlet : 1/4"
Vacuum Type

6 pieces in one carton

PA-202V

AIR HYDRAULIC RIVETER Air inlet : 1/4"
Vacuum Type

6 pieces in one carton

PA-312V

AIR HYDRAULIC RIVETER
Vacuum Type

Air inlet : 1/4"

6 pieces in one carton

PA-203N

AIR HYDRAULIC RIVETER

Air inlet : 1/4"

6 pieces in one carton

	Traction Power lb.-f(kg.-f)	Stroke Length mm	Capacity mm	Air Pressure PSI (bar)	Avg. Air Consumption L/cycle	Net Weight LBS	Net Weight kg	Air Hose Inch	Sound Pressure dBA	Vibration Level m/s²
PA-111	4100(1860)	26	4.8-6.4	90(6.3)	2.88	6.6	3.00	3/8"	82.0	0.8
PA-201	3534(1603)	14	2.4-6.4	90(6.3)	2.32	3.9	1.80	3/8"	79.7	0.5
PA-211	3748(1700)	18	2.4-6.4	90(6.3)	2.9	3.8	1.75	3/8"	79.7	0.8
PA-301	2303(1045)	16	2.4-4.8	90(6.3)	1.48	3.3	1.50	3/8"	79.7	0.3
PA-321	2612(1185)	22	2.4-4.8	90(6.3)	1.48	3.3	1.50	3/8"	79.7	0.4
PA-201V	3534(1603)	14	2.4-6.4	90(6.3)	2.32	3.9	1.79	3/8"	79.7	0.5
PA-301V	2303(1045)	16	2.4-4.8	90(6.3)	1.48	3.3	1.50	3/8"	79.7	0.3
PA-401V	1532(695)	16	2.4-4.0	90(6.3)	0.67	2.75	1.25	3/8"	79.7	0.3
PA-202V	2460(1200)	14	3.2-6.4	90(6.3)	1.8	4.2	1.91	3/8"	79.7	0.3
PA-312V	1983(900)	18	2.4-4.8	90(6.3)	1.8	3.8	1.74	3/8"	75.3	0.4
PA-203	2640(1200)	16	3.2-6.4	90(6.3)	1.48	3.3	1.50	3/8"	79.7	0.5

AIR HYDRAULIC RIVETER

PB-2601

AIR HYDRAULIC NUT SETTER

Air inlet : 1/4"

- Automatic mechanism to quickly push up and pull back rivet.
- 6 size spindle 3mm / 4mm / 5mm / 8mm /10mm / 12mm
- The thickness of the pull nut can be adjusted quickly.

PA-211TS

AIR HYDRAULIC RIVETER

Air inlet : 1/4"

6 pieces in one carton

PB-2402

AIR HYDRAULIC RIVET NUT TOOL

Air inlet : 1/4"

6 pieces in one carton

PB-1305
PB-1308
PB-1310

AIR RIVET NUT TOOL

Air inlet : 1/4"

12 pieces in one carton

- Automatic mechanism to quickly push up and pull back rivet.
- Quick release clip design to change spindle easily.
- Two trigger design for quick forward/reverse operation.

PB-1312

AIR RIVET NUT TOOL

Air inlet : 1/4"

12 pieces in one carton

	Traction Power lb.-f(kg.-f)	Free Speed R.P.M	Stroke Length mm	Capacity mm	Air Pressure PSI (bar)	Avg. Air Consumption L/cycle	Net Weight LBS	Net Weight kg	Air Hose Inch	Sound Pressure dBA	Vibration Level m/s²
PB-2601	4300(594.5)	3500	0-7.0	M3 - M12	90 (6.3)	7.5	5.4	2.46	3/8"	80	1.2
PA-211TS	3748(1700)	----	18	6.4 & 8.0	90(6.3)	2.90	3.80	1.75	3/8"	79.7	0.8
PB-2402	3638(1650)	----	9	Steel M4.M10 Stainless M4.M8	90(6.3)	1.50	3.40	1.55	3/8"	82.0	0.8
PB-1305	-----	1200	-----	M3.M4.M5	90(6.3)	7.8	2.42	1.10	3/8"	86.0	1.6
PB-1308	-----	600	-----	M6.M8	90(6.3)	7.8	2.86	1.30	3/8"	86.0	1.6
PB-1310	-----	400	-----	M8.M10	90(6.3)	7.8	2.80	1.30	3/8"	86.0	1.6
PB-1312	-----	400	-----	M10.M12	90(6.3)	7.8	2.80	1.27	3/8"	86.0	1.6

RIVETER ADAPTOR
RIVET NUT ADAPTOR

PA-9048PT
Riveter Adaptor

PA48PB06T
Riveter Adaptor + Rivet Nut Adaptor

PB-9006PT
Rivet Nut Adaptor

Safety Note

Please note the following safety notes to avoid malfunctions, damage or physical injury:

- Please observe all safety notes of the used driving tool (drill)
- Always switch off the driving tool and pull off the power plug before maintaining the blind Riveting attachment,e.g. changing the nosepieces or when not in use.
- Only use the blind bolting attachment as indicated in this manual for setting blind Rivets. The unit is not designed for continuous, professional use.
- Always secure the work piece.
- Do not wear loose, clothing or jewellery. Tie up hair or clothing cannot get into moving parts.
- Persons with limited physical, sensorial or mental abilities are not allowed to use the unit, unless they are supervised for their safety by a qualified person or are briefed by the responsible person how to use the unit.
- only use the blind Riveting attachment with the included nosepieces.
- Should the unit become damaged do not use it and have it repaired by a professional or contact our customer support department. Do not disassemble the unit or try repairing it yourself.
- Do not continue using the unit if it was damaged or the unit was dropped down. Please contact our customer support service.

RIVETER ADAPTOR
RIVET NUT ADAPTOR

PA-9048
4.8mm (3/16") RIVETER ADAPTOR

PB-9006
M6 RIVET NUT ADAPTOR

PA-9064
6.35mm (1/4") RIVETER ADAPTOR

PB-9010
M10 RIVET NUT ADAPTOR

ASSEMBLING AND USING BEFORE FIRST USE

Remove the unit and the accessory out of the packaging . keep packaging materials Out of reach of children.there is risk of suffocation

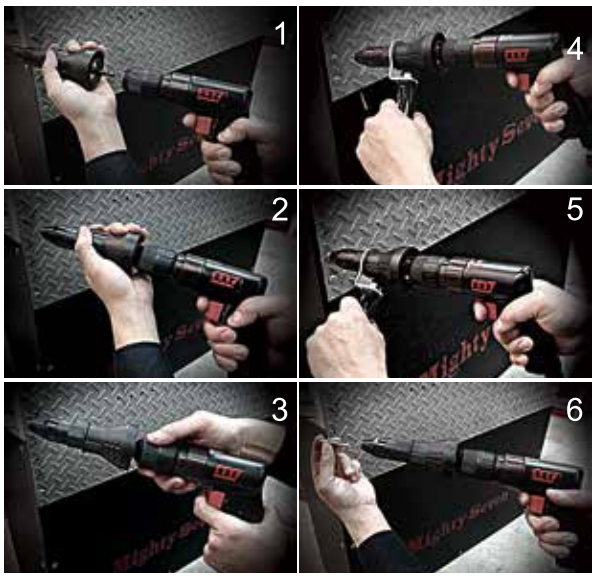

TECHNICAL DATA

PA-9064

Dimensions	59mm x173mm(2-11/32 x 6-3/4 inch)
Net Weight	330g=0.73 lbs
Gross Weight	500g=1.10 lbs
Nosepiece	3.2mm(1/8), 4.0mm(5/32)
Nosepiece	4.8mm(3/16),6.4mm(1/4)
Hex Shank	1/4" (6.35 mm)
Cordless Drill	14.4V ,18V
Cordless Drive	14.4V ,18V
Reversible electric	1/2"Drill
Reversible pneumatic	1/2"Drill
Min. Torque Strength	50 Nm = 37 ft/lbs
Max. rpm	1,000 rpm

1. Hex Shank	1/4 (6.35 mm)
2. Housing	PA+GF
3. Nosepiece	3.2mm, 4.0mm, 4.8mm, 6.4mm
4. Sight Window	Blind Rivet Loading
5. Wrench	1PC
6. Handle	1PC

PA-9048

Dimensions	59mm x158mm(2-11/32" x 6-1/4")
Net Weight	318g=0.70 lbs
Gross Weight	368g=0.81 lbs
Nosepiece	2.4mm(3/32),3.2mm(1/8)
Nosepiece	4.0mm(5/32),4.8mm(3/16)
Hex Shank	1/4" (6.35 mm)
Cordless Drill	12V 14.4V 18V
Cordless Drive	12V 14.4V 18V
Reversible electric	3/8"Drill
Reversible pneumatic	3/8"Drill
Min. Torque Strength	11 Nm = 8 ft/lbs
Max. rpm	1,000 rpm

1 Hex Shank	1/4 (6.35 mm)
2 Housing	PA+GF
3 Nosepiece	2.4mm , 3.2mm, 4.0mm, 4.8mm
4 Sight Window	Blind Rivet Loading
5 Wrench	1PC

PB-9006

Dimensions	59mm x172mm(2-11/32" x 6-25/32")
Weight	280g=0.62 lbs
Nosepiece	M3 M4 M5 M6
Hex Shank	1/4" (6.35 mm)
Cordless Drill	12V 14.4V
Cordless Drive	12V 14.4V
Reversible electric	Drill (Advice 500W)
Reversible pneumatic	Drill (Advice 3/8")
Min. Torque Strength	15 Nm = 11 ft/lbs
Max. rpm	1000 rpm

PB-9010

Dimensions	59mm x180mm(2-11/32" x 7-3/32")
Weight	350g=0.77 lbs
Nosepiece	M6 M8 M10
Hex Shank	1/4" (6.35 mm)
Cordless Drill	14.4V
Cordless Drive	18V
Reversible electric	Drill (Advice 500W)
Reversible pneumatic	Drill (Advice 1/2")
Min. Torque Strength	100 Nm = 73.7 ft/lbs
Max. rpm	800 rpm

AIR NAILER AIR STAPLER

SJ-FN90E

Air Framing Nailer 34°

Air inlet : 1/4"

3 pieces in one carton

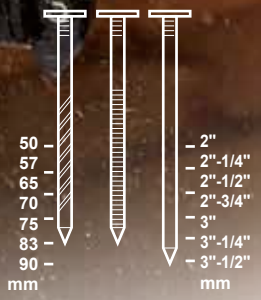

	Collated	Nail Head	Nail Length	Shank Dia.		Load Capacity	Weight	Working Pressure
	mm		mm(inch)	mm	mm	Nails	kgs	P
SJ-FN90E	Paper / Wire	Clipped Head	50~90(2"~3-1/2")	2.9	3.3	75-105	3.9	90

AIR NALLER & AIR STAPLER

SJ-1650T

AIR NAILER
Safety trigger

Air inlet : 1/4"

5 pieces in one carton

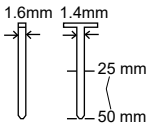

SJ-1830F
SJ-C1830F

AIR NAILER
Safety trigger

Air inlet : 1/4"

10 pieces in one carton

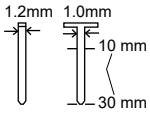

SU-C422J
SU-C1022J

AIR NAILER

Air inlet : 1/4"

10 pieces in one carton

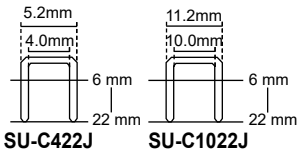

SJ-TN64

AIR CONCRETE NAILER Air inlet : 1/4"

4 pieces in one carton

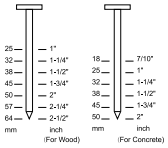

SJ-BNF1664

AIR BRAD NAILER Air inlet : 1/4"

5 pieces in one carton

SU-9025

AIR STAPLER
Safety trigger

Air inlet : 1/4"

10 pieces in one carton

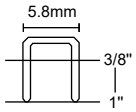

SJ-1850F

AIR NAILER
Safety trigger

Air inlet : 1/4"

10 pieces in one carton

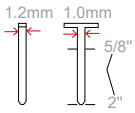

SU-8016

AIR STAPLER
Safety trigger

Air inlet : 1/4"

10 pieces in one carton

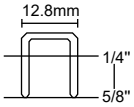

SU-9040

AIR STAPLER
Safety trigger

Air inlet : 1/4"

4 pieces in one carton

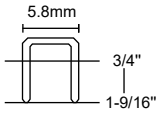

SU-H3518S
SU-H3522S
SU-H3218S
SU-H3222S

HAND CARTON STAPLER

5 pieces in one carton

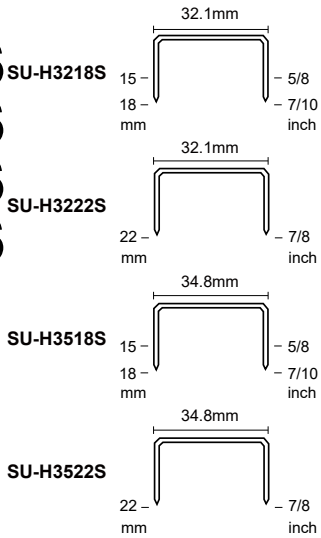

SU-A3518S
SU-A3522S
SU-A3218S
SU-A3222S

AIR CARTON STAPLER

5 pieces in one carton

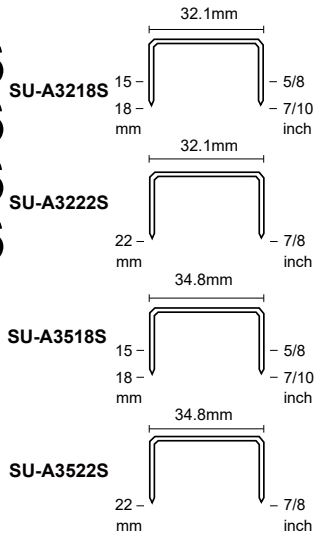

	Dimensions mm	Nail Length mm(inch)	Crown mm	Shank (Thickness/Width) mm mm	Load Capacity Nails	Weight kgs	Working Pressure PS
SU-A3518S	200*102*400	15 & 18	34.8	0.9 / 2.2	100	2.53	90
SU-A3522S	200*102*400	22	34.8	0.9 / 2.2	100	2.53	90
SU-A3218S	200*102*400	15 & 18	32.1	0.9 / 1.9	100	2.53	90
SU-A3222S	200*102*400	22	32.1	0.9 / 1.9	100	2.53	90
SU-H3518S	310*102*460	15 & 18	34.8	0.9 / 2.2	100	2.18	----
SU-H3522S	310*102*460	22	34.8	0.9 / 2.2	100	2.18	----
SU-H3218S	310*102*460	15 & 18	32.1	0.9 / 1.9	100	2.18	----
SU-H3222S	310*102*460	22	32.1	0.9 / 1.9	100	2.18	----

	Head Dia. mm	Gauge	Nail Length mm(inch)	Crown mm	Crown mm	Shank (Thickness/Width) mm	Shank (Thickness/Width) mm	Load Capacity Nails	Weight kgs	Working Pressure PS
SJ-1650T	2.8	16	20-50 (3/4"-2")	----	----	1.4	1.60	100	2.35	90
SJ-1830F	1.9	18	10-30 (3/8"-1-2/11")	----	----	1.0	1.2	100	1.2	90
SU-C422J	----	20	6-22 (1/4"-7/8")	4	0.6x1.2	----	----	100	1.15	90
SU-C1022J	1.9	20	6-22 (1/4"-7/8")	10	0.6x1.2	----	----	100	1.20	90
SJ-1850F	----	18	20-50 (3/4"-2")	----	----	1.0	1.2	100	1.4	90
SU-8016	----	21	6-16 (1/4"-5/8")	12.8	0.65x0.95	----	----	100	0.90	90
SU-9025	----	18	10-25 (3/8"-1")	5.8	1.0x1.25	----	----	100	1.1	90
SU-9040	----	18	10-40 (3/4"-1-9/16")	5.8	1.0x1.25	----	----	100	2.20	90
SJ-TN64	7.5	13	(18~64)	----	----	2.5	2.50	80	2.35	90
SJ-BNF-1664	2.8	16	(20~64)	----	----	1.4	1.60	100	2.35	90

AIR COIL NALLER

SJ-CN55

COIL NAILER
Safty Trigger

Air inlet : 1/4"

4 pieces in one carton

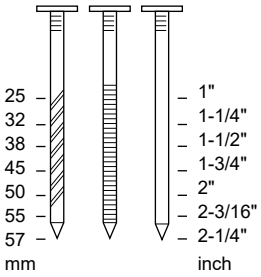

SJ-CN70

COIL NAILER
Safty Trigger

Air inlet : 1/4"

4 pieces in one carton

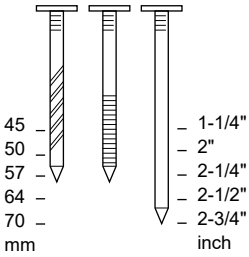

SJ-CN57

57mm AIR COIL NAILER
Safty Trigger

Air inlet : 1/4"

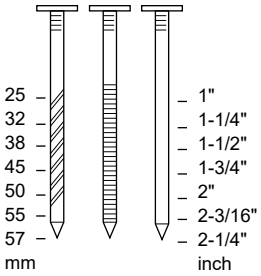

SJ-CN65

65mm AIR COIL NAILER
Safty Trigger

Air inlet : 1/4"

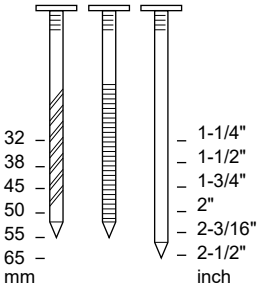

	Shank Dia. mm	Head Dia. mm	Nail Length mm	Collated	Driving Power (ft-lb)	Load Capacity	Dimensions (H*W*L)mm	Weight kg	Working Pressure PSI
SJ-CN55	2.1-2.3	5.0-5.7	25~57	Wire	36.54	300-350	283*131*270	2.8	90
SJ-CN70	2.3-2.9	5.7-7.0	45~70	Wire	61.07	150-300	303*129*307	3.7	90
SJ-CN57	2.1-2.3	5.0-6.0	25~57	Wire / Plastic Sheet	36.40	200-300	310*130*300	2.2	90
SJ-CN65	2.3-2.5	5.0-6.0	32~65	Wire / Plastic Sheet	39.70	200-300	330*130*300	2.3	90

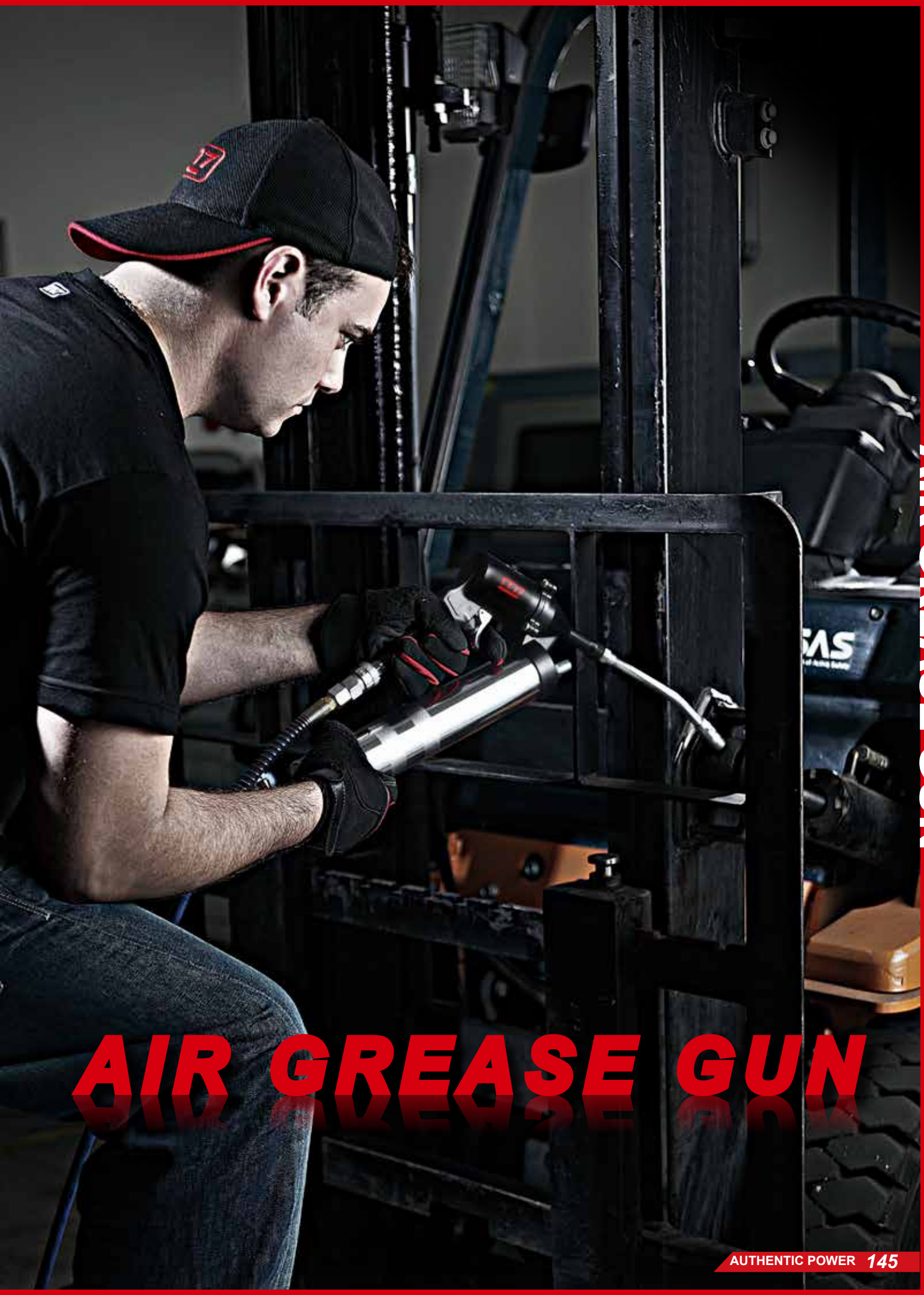

AIR GREASE GUN

AIR GREASE GUN

AIR GREASE GUN & BLOW GUN

LUBRICATION P.215
SG-101 KIT / SO-10 / SO-10T KIT

AIR GREASE GUN

JC-491
STANDARD SAFETY TIP

10 pieces in one carton

Available with

JC-491 for JC-405 JC-410 JC-412 JC-424 JC-435

SG-400/500
AIR GREASE GUN

Air inlet : 1/4"

10 pieces in one carton

Note: SG-500 for Australia

SG-401/501
AIR GREASE GUN / CONTINUOUS TYPE

Air inlet : 1/4"

10 pieces in one carton

Note: SG-501 for Australia

SG-400C
COMPOSITE AIR GREASE GUN

Air inlet : 1/4"

10 pieces in one carton

SG-405
SG-400 + SG-902 400 ml

SG-407
SG-401 + SG-902 400 ml
Continuous Type

Air Grease Gun

10 pieces in one carton

SG-902
Grease Tube Adapter

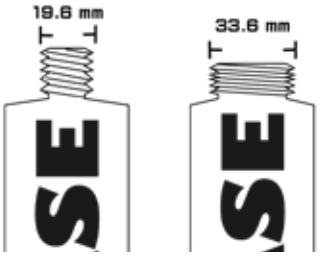

Key Spec:
Single shot type
Air inlet : 1/4"
19.6mm & 33.6mm
Thread Adapter Included

FEATURES

- The body is equipped with two sizes of adapters, which can use 19.6mm thread and 33.6mm thread head Grease Tube.

	Air Inlet inch	Working Pressure kgf/cm²	Proof Pressure kgf/cm²	Capacity C.C	Air Hose Inch	Net Weight LBS	Net Weight kg	Sound Pressure dBA	Vibration Level m/s²
SG-400	1/4"	2.8-8.4	10.5	400	3/8"	3.2	1.46	80.2	0.7
SG-500	1/4"	2.8-8.4	10.5	500	3/8"	3.52	1.6	80.2	0.7
SG-400C	1/4"	2.8-8.4	10.5	400	3/8"	2.2	1.0	81.4	0.6
SG-401	1/4"	2.8-8.4	10.5	400	3/8"	3.52	1.6	74.0	2.0
SG-501	1/4"	2.8-8.4	10.5	500	3/8"	3.74	1.7	74.0	2.0

JC-304/310/313
JC-320/340

AIR BLOW GUN

Air inlet : 1/4"

10 pieces in one carton

JC-405/410/412
JC-424/435

AIR BLOW GUN

Air inlet : 1/4"

10 pieces in one carton

JC-304
JC-340
60 pieces in one carton

JC-405
100 pieces in one carton

JC-310 / JC-410
JC-313 / JC-412
JC-435 / JC-424 / JC-435
50 pieces in one carton

JC-202

AIR BLOW GUN

Air inlet : 1/4"

60 pieces in one carton

JC-640/641/680

SUPER AIR BLOW GUN

JC-640/JC-641 40"
JC-680 80"

Air inlet : 1/4"

30 pieces in one carton

JC-0424[SET]

AIR BLOW GUN

Contents
JC-405 8PCS
JC-410 8PCS
JC-412 8PCS

Air inlet : 1/4"

4 set in one carton

JC-0415[SET]

AIR BLOW GUN

Contents
JC-405 15PCS

Air inlet : 1/4"

4 set in one carton

	Nozzle Length inch	Working Pressure PSI (bar)	Max Pressure PSI (bar)	Avg. Air Consumption CFM(L/min)	Avg. Air Consumption CFM(L/min)	Net Weight LBS	Net Weight kg	Air Hose Inch	Sound Pressure dBA
	L	Working	MAX	1/4" Hous	3/8" Hous	lb	kg		
JC-202	7"~12"	90-120(6.2-8.5)	220(15.1)	----------	5.10(144)	0.38	0.17	3/8"	90.0
JC-304	4"	75-120(5.3-8.5)	150(10.6)	13.0(368)	15.0(425)	0.15	0.07	3/8"	90.0
JC-310	10"	75-120(5.3-8.5)	150(10.6)	13.0(368)	15.0(425)	0.22	0.10	3/8"	90.0
JC-313	13"	75-120(5.3-8.5)	150(10.6)	13.0(368)	15.0(425)	0.24	0.11	3/8"	90.0
JC-320	20"	75-120(5.3-8.5)	150(10.6)	13.0(368)	15.0(425)	0.31	0.14	3/8"	90.0
JC-340	40"	75-120(5.3-8.5)	150(10.6)	13.0(368)	15.0(425)	0.50	0.23	3/8"	90.0
JC-405	5"	75-120(5.3-8.5)	150(10.6)	13.0(368)	15.0(425)	0.24	0.11	3/8"	90.0
JC-410	10"	75-120(5.3-8.5)	150(10.6)	13.0(368)	15.0(425)	0.26	0.12	3/8"	90.0
JC-412	12"	75-120(5.3-8.5)	150(10.6)	13.0(368)	15.0(425)	0.28	0.13	3/8"	90.0
JC-424	24"	75-120(5.3-8.5)	150(10.6)	13.0(368)	15.0(425)	0.31	0.14	3/8"	90.0
JC-435	35"	75-120(5.3-8.5)	150(10.6)	13.0(368)	15.0(425)	0.55	0.25	3/8"	90.0
JC-640	40"	75-120(5.3-8.5)	150(10.6)	13.0(368)	15.0(425)	0.75	0.34	3/8"	90.0
JC-641	40"	75-120(5.3-8.5)	150(10.6)	13.0(368)	15.0(425)	0.75	0.34	3/8"	90.0
JC-680	80"	75-120(5.3-8.5)	150(10.6)	13.0(368)	15.0(425)	1.41	0.64	3/8"	90.0

AUTO REPAIR TOOL

NC-0208[SET]

1/4" DRIVE AIR IMPACT WRENCH 8 PCS
Twin Dog Type

Air inlet : 1/4"

10 pieces in one carton

- 1pc 1/4" Air Impact Wrench (NC-2710)
- 5pcs Socket:8.9.10.11.12mm
- 1pc 1/4" Drive Universal Joint
- 1pc 1/4" Extension Bar
- 1pc Plug

NC-2710

	Square Drive	Bolt Capacity	Torque Range	Max Torque		Free Speed	Avg. Air Consumption	Air Pressure	Overall Length	Net Weight		Air Hose	Sound Pressure	Vibration Level
	Inch	Inch (mm)	FT-LB (Nm)	FT-LB	Nm	R.P.M	CFM (L/min)	PSI (bar)	Inch (mm)	LBS	kg	Inch	dBA	m/s²
NC-2710	1/4"	M8	7.4-29.5 (10-40)	29	40	11000	5.3(150)	90 (6.3)	5-3/8" (136)	1.76	0.8	3/8"	91.0	3.4

QB-0618[SET]

90° MINI SANDER 18 PCS SET

Air inlet : 1/4"

CONTENTS:

QB-625 (1pcs)
Disc 2" PAD (1pcs)
Disc 3" PAD (1pcs)
Removal Sandering
2" #80-YL (1pcs)
2" #150-RD (2pcs)
2" #300-BL (2pcs)
2" Stripping Disc
3" #80-YL (1pcs)
3" #150-RD (2pcs)
3" #300-BL (2pcs)
3" Stripping Disc
Adaptor
Spanner
Oil

QB-625

	Pad Dia / Arbor Size	Free Speed	Avg. Air Consumption	Air Pressure	Overall Length	Motor	Net Weight		Air Hose	Sound Pressure	Vibration Level
	inch	R.P.M	CFM	PSI (bar)	Inch (mm)	HP	LBS(kg)		Inch	dBA	m/s²
QB-625	2" / 3"	15000	17.2	90(6.3)	7-1/8"(180)	0.6	1.3	0.61	3/8"	75	2.5

NC-2210N[SET]

1/4" DRIVE AIR IMPACT WRENCH

Twin Dog Type Air inlet : 1/4"

1 carton / **5** set

20 pieces in one carton (Air Tool Only)

NC-2210

Contents:

+ 1 pc 1/4" Impact Socket 8 mm
+ 1 pc 1/4" Impact Socket 9 mm
+ 1 pc 1/4" Impact Socket 10 mm
+ 1 pc 1/4" Impact Socket 11 mm
+ 1 pc 1/4" Impact Socket 12 mm
+ 1 pc 1/4" Extension Bar (L:50mm)
+ 1 pc 1/4" Extension Bar (L:125mm)
+ 1 pc 1/4" Universal Joint
+ 1 pc 1/4" Plug
+ 1 pc Air Impact Wrench

	Square Drive Inch	Bolt Capacity Inch (mm)	Torque Range FT-LB (Nm)	Max Torque FT-LB	Max Torque Nm	Free Speed R.P.M	Avg. Air Consumption CFM (L/min)	Air Pressure PSI (bar)	Overall Length Inch (mm)	Net Weight LBS	Net Weight kg	Air Hose Inch	Sound Pressure dBA	Vibration Level m/s²
NC-2210	1/4"	M5	4-45(6-61)	50	67.8	11000	1.8(51)	90(6.3)	6-17/32"(166)	1.4	0.65	3/8"	77.0	1.8

QA-651N [SET]

AIR DIE GRINDER

Air inlet : 1/4"

1 carton / **5** set

20 pieces in one carton (Air Tool Only)

QA-651

Contents:

+ 1 pc Air Die Grinder
+ 1 pc Collet : 3mm (or1/8")
+ 5 pcs Grinder Stones 3mm
+ 5 pcs Grinder Stones 6mm
+ 1 pc 1/4"Plug
+ 1 pc Oil Box
+ 2 pcs Spanner Wrench

	Collet Size inch(mm)	Free Speed R.P.M	Avg. Air Consumption CFM (L/min)	Air Pressure PSI (bar)	Overall Length Inch (mm)	Hose Length mm	Net Weight LBS(kg)	Net Weight kg	Air Hose Inch	Sound Pressure dBA	Vibration Level m/s²	Motor HP
QA-651	1/4" (6)	18000	2.7(76)	90(6.3)	5" (127)	-----	1.10	0.5	3/8"	74.0	0.3	0.3

QP-212N[SET]

AIR HIGH SPEED SANDER

Air inlet : 1/4"

1 carton / **5** set

20 pieces in one carton (Air Tool Only)

Contents:

+ 1 pc Air High Speed Sander
+ 1 pc 2" Rubber PAD(1/4"-20)
+ 1 pc 2" Pad Die#80
+ 1 pc 2" Stripping Disc #80-YL(Coarse)
+ 1 pc 2" Stripping Disc #150-RD(Med)
+ 1 pc 3" Rubber PAD(1/4"-20)
+ 1 pc 3" Pad Die#80
+ 1 pc 3" Stripping Disc #80-YL(Coarse)
+ 1 pc 3" Stripping Disc #150-RD(Med)
+ 1 pc 1/4" Plug
+ 1 pc Oil Box
+ 1 pc Spanner Wrench

QP-212

	Pad Dia inch(mm)	Free Speed R.P.M	Avg. Air Consumption CFM (L/min)	Air Pressure PSI (bar)	Overall Length Inch (mm)	Motor HP	Net Weight LBS(kg)		Air Hose Inch	Sound Pressure dBA	Vibration Level m/s²	Spindle Size
QP-212	2" or 3"	18000	2.1(59)	90(6.3)	4-1/4"(107)	0.3	1.1	0.50	3/8"	73.0	0.9	1/4"-20

QP-213N[SET]

Air Orbit Sander

Air inlet : 1/4"

1 carton / **5** set

20 pieces in one carton (Air Tool Only)

Contents:

+ 1 pc Air Sander
+ 1 pc 2" PAD(5/16"-24)
+ 1 pc 3" PAD (5/16"-24)
+ 10 pcs 2" Sandpaper#180
+ 10 pcs 2" Sandpaper#220
+ 10 pcs 2" Sandpaper#320
+ 10 pcs 3" Sandpaper#180
+ 10 pcs 3" Sandpaper#220
+ 10 pcs 3" Sandpaper#320
+ 1 pc 1/4" Plug
+ 1 pc Oil Box
+ 2 pcs Spanner Wrench

QP-213

	Pad Dia inch(mm)	Free Speed R.P.M	Avg. Air Consumption CFM (L/min)	Air Pressure PSI (bar)	Overall Length Inch (mm)	Motor HP	Net Weight LBS(kg)		Air Hose Inch	Sound Pressure dBA	Vibration Level m/s²	Spindle Size
QP-213	3"(76)	18000	2.1(59)	90(6.3)	4-5/8"(117)	0.3	1.1	0.50	3/8"	76.0	1.2	5/16"-24

QP-223N[SET]

AIR MINI POLISHER
Air inlet : 1/4"

1 carton / **5** set

20 pieces in one carton (Air Tool Only)

QP-223

Contents:

+ 1 pc Air Mini Polisher(QP-223)
+ 1 pc 3"PAD(5/16"-24)
+ 1 pc 3"Sponge (Medlum)
+ 1 pc 3"Sponge (Rough)
+ 1 pc 3"Wool Bonnet
+ 1 pc 1/4"Plug
+ 1 pc Spanner Wrench

	Pad Dia inch(mm)	Free Speed R.P.M	Avg. Air Consumption CFM (L/min)	Air Pressure PSI (bar)	Overall Length Inch (mm)	Motor HP	Net Weight LBS(kg)		Air Hose Inch	Sound Pressure dBA	Vibration Level m/s²	Spindle Size
QP-223	3"(76)	5500	2.2(62)	90(6.3)	5-1/8"(130)	0.38	1.3	0.6	3/8"	74.0	0.9	5/16"-24

QE-323N [SET]

1/4" AIR REVERSIBLE DRILL
Air inlet : 1/4"

1 carton / **5** set

20 pieces in one carton (Air Tool Only)

QE-323

Contents:

+ 1 pc 3.5mm Drill Bits
+ 1 pc 4.0mm Drill Bits
+ 1 pc 4.5mm Drill Bits
+ 1 pc 5.0mm Drill Bits
+ 1 pc 5.5mm Drill Bits
+ 1 pc Key Wrench
+ 1 pc 1/4"Plug
+ 1 pc Oil Box
+ 1 pc Air Reversible Drill(QE-323)

	Chuck Size inch/mm	Free Speed R.P.M	Motor hp	Avg. Air Consumption CFM (L/min)	Air Pressure PSI (bar)	Overall Length Inch (mm)	Net Weight LBS	kg	Air Hose Inch	Sound Pressure dBA	Vibration Level m/s²
QE-323	1/4" (6.35)	1600	0.38	1.9(154)	90(6.3)	6-15/32"(164)	1.7	0.78	3/8"	74.0	1.2

RA-505N [SET]

Air Screwdriver

Air inlet : 1/4"

Twin Dog Type

Screw Capacity : M5

1 carton / **5** set

20 pieces in one carton

Contents:

+ 1 pcs Air Screwdriver
+ 2 pcs Bits FD(L:50mm)
+ 2 pcs Bits PH2(L:65mm)
+ 1 pcs Bits PH2(L:100mm)
+ 1 pc 1/4"Plug
+ 1 pc Oil Box

RA-505

	Chuck Size inch(mm)	Torque Range FT-LB(Nm)	Free Speed R.P.M	Avg. Air Consumption CFM (L/min)	Air Pressure PSI (bar)	Overall Length Inch (mm)	Net Weight LBS	Net Weight kg	Air Hose Inch	Sound Pressure dBA	Vibration Level m/s²
RA-505	1/4"(6.35)	5-45 (6~61)	11000	1.8 (51)	90(6.3)	6-5/16"(161)	1.54	0.7	3/8"	74.0	3.3

QM-1125

PNEUMATIC CV JOINT BOOTS FITTING TOOL

4 pieces in one carton

	Capacity Inch (mm)	Max Air Pressure PSI (bar)	Air Pressure PSI (bar)	Overall Length Inch (mm)	Net Weight LBS(kg)		Air Hose Inch
QM-1125	1"-4-3/8"(25-110)	125(8.6)	90(6.3)	17-3/8"(442)	7.15	3.25	3/8"

QT-102

AIR TYRE BUFFER

Air inlet : 1/4"

20 pieces in one carton

QT-203 / QT-113

AIR TYRE BUFFER / QUICK CHANGE CHUCK

Air inlet : 1/4"

20 pieces in one carton

	Chuck Size inch(mm)	Collet Size inch(mm)	Free Speed R.P.M	Avg. Air Consumption CFM (L/min)	Air Pressure PSI (bar)	Overall Length Inch (mm)	Motor hp	Net Weight LBS(kg)		Air Hose Inch	Sound Pressure dBA	Vibration Level m/s²
QT-102	----	1/4" (6)	7500	3.0 (85)	90(6.3)	5-1/2"(140)	0.3	0.9	0.41	3/8"	77.0	1.3
QT-203	Hex.7/16"(11.1)	----	4000	10.6 (300)	90(6.3)	9-3/4"(250)	0.5	1.76	0.80	3/8"	75.0	0.87
QT-113	Hex.7/16"(11.1)	----	2500	10.6 (300)	90(6.3)	9-3/4"(250)	0.5	1.76	0.80	3/8"	75.0	0.87

QB-0808
QB-0808U For USA

AIR SURFACE-CLEANING TOOL

Air inlet : 1/4"

- Air Surface-Cleaning Tool:1pc(QB-802)
- Eraser Wheel:1pc
- Stripping Wheel :1pc
- Wire Wheel(Coarse):1pc
- Wire Wheel:1pcs
- Allen Key 6mm:1pc
- Spanner Wrench:1pc
- 1/4" Plug:1pc
- Adapter Male UNF 5/16"-24
- Female M6×1.0:1pc

10 pieces in one carton

QB-9415 QB-9414 QB-9414U For USA

QB-9411

QB-9412

QB-9400

QB-812 / QB-812U

Air Eraser Air inlet : 1/4" **For USA**

Spindle 3/8"-24

For USA

QB-802 / QB-802U

AIR SURFACE-CLEANING TOOL

Air inlet : 1/4"

10 pieces in one carton

	Free Speed R.P.M	Avg. Air Consumption CFM (L/min)	Air Pressure PSI (bar)	Overall Length Inch (mm)	Motor HP	Net Weight LBS	Net Weight kg	Air Hose Inch	Sound Pressure dBA	Vibration Level m/s²
QB-802	3600	10.6(300)	90(6.3)	7-7/8"(200)	0.7	2.6	1.2	3/8"	86	0.3
QB-812	4000	10.0(283)	90(6.3)	8-7/8"(225)	0.5	1.7	0.8	3/8"	75	0.87

SK-1131

AIR CAULKING GUN

6 pieces in one carton

SK-1010

AIR CAULKING GUN

10 pieces in one carton

	Avg. Air Consumption CFM (L/min)	Air Pressure PSI (bar)	Overall Length Inch (mm)	Net Weight LBS	Net Weight kg	Air Hose Inch
SK-1010	4.0(113)	50~70(3.4~4.8)	12" (305)	2.4	1.1	3/8"
SK-1131	4.0(113)	60~90(4.1~6.2)	24-7/16" (620)	2.66	1.21	3/8"

SM-111R

AIR DENT PULLER

Air inlet : 1/4"

4 pieces in one carton

- Large area and slight depression of the sheet metal can be quickly repaired.
- Three sizes of suction cups can be used in different areas of depression.
- Simple structure and long product life.

	Pad Dia Inch(mm)	Exhaust Syetem	Maximum Pulling Force Kg	Air Pressure PSI (bar)	Avg. Air Consumption CFM (L/min)	Net Weight LBS	Net Weight kg	Slide Hammer Weight LBS	Slide Hammer Weight kg	Overall Length Inch (mm)
SM-111R	3",4.5",6"(78,115,155)	Rear	90-100	90 (6.3)	8.5(240)	6.0	2.75	3.5	1.6	44-1/8"(1120)

SB-6042

Air inlet : 1/4"
Dial Face Size : ∅3"

SB-3030

Air inlet : 1/4"

SB-3038

Air inlet : 1/4"

20 pieces in one carton

SB-4031
SB-4151

ONE TOUCH
Air inlet : 1/4"
Short Piping
Dial Face Size : ∅3.5"

Long Piping

SB-4151

20 pieces in one carton

SB-2031
SB-2131

ONE TOUCH
Air inlet : 1/4"
Short Piping
Dial Face Size : ∅3.5"

Long Piping

SB-2131

SB-422

TYRE INFLATOR
Air inlet : 1/4"

20 pieces in one carton

SB-423

TYRE INFLATOR
Air inlet : 1/4"

12 pieces in one carton

SB-201

DIGITAL TYRE INFLATOR
Air inlet : 1/4"

20 pieces in one carton

SB-215

DIGITAL TYRE INFLATOR
Air inlet : 1/4"

12 pieces in one carton

SB-710

TYRE INFLATOR
Tyre Valve Clip

Air Inlet : 1/4"

12 pieces in one carton

Large Dial Face
1m Piping

- Measuring range: 0~230psi, 0~16bar.
- Two-stage trigger (inflating & deflating), clip-on connector.
- Large dial face and easy to read psi, bar.

	Max Pressure PSI (bar)	Air Consumption at 100PSI CFM	Air Inlet linch	Air Pressure PSI (bar)	Net Weight LBS	Net Weight kg	Air Hose Inch	Nozzle Length cm	Nozzle
	MAX				lb	kg		L	
SB-2031	160(11.0)	1.41	1/4"	90(6.3)	1.32	0.6	3/8"	30	One touch clip
SB-2131	160(11.0)	1.41	1/4"	90(6.3)	1.43	0.65	3/8"	150	One touch clip
SB-3030	200(14.0)	1.41	1/4"	90(6.3)	1.08	0.49	3/8"	30	Tyre valve clip
SB-3038	200(14.0)	1.41	1/4"	90(6.3)	1.49	0.68	3/8"	100	Tyre valve clip
SB-4031	160(11.0)	1.41	1/4"	90(6.3)	1.32	0.6	3/8"	30	One touch clip
SB-4151	160(11.0)	1.41	1/4"	90(6.3)	1.43	0.65	3/8"	150	One touch clip
SB-6042	160(11.0)	1.41	1/4"	90(6.3)	1.36	0.62	3/8"	100	Tyre valve clip
SB-201	160(11.0)	1.41	1/4"	90(6.3)	0.70	0.32	3/8"	30	Tyre valve clip
SB-215	160(11.0)	1.41	1/4"	90(6.3)	0.88	0.40	3/8"	150	Tyre valve clip
SB-422	160(11.0)	1.41	1/4"	90(6.3)	1.21	0.55	3/8"	45	Tyre valve clip
SB-423	220(15.0)	1.41	1/4"	90(6.3)	2.92	1.33	3/8"	100	Tyre valve clip
SB-710	200(13.8)	1.41	1/4"	90(6.3)	1.0	0.5	3/8"	100	Tyre valve clip

SE-2011
LED WORKLIGHT

Key Spec:
LED : 3W COB with 1W LED
Lumen : 250~300 lm
Lithium Rechargeable Battery : 3.7V 1800m AH
Charger Input : DC 5V Micro USB
Recharger Time : 3 ~ 4 hours
Discharging Time : 2 . 5 ~ 3 hours
Operation Temperature : - 5 ℃ to 50 ℃

10 pieces in one carton

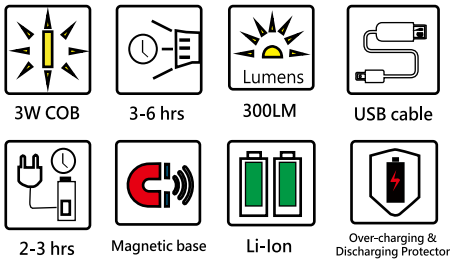

FEATURES
- LED work light with lithium rechargeable battery.
- Lighting part using 3 watts COB LED, provide longer life time.
- Magnetic Base can attach on any sheet metal parts.
- SE-2011 also has Over-charging & Discharging Protector.

SB-501
Tyre Inflator
Air inlet : 1/4"

12 pieces in one carton

SE-1101
LED WORK LAMP
USB CHARGING AVAILABLE

20 pieces in one carton

	Max Pressure PSI (bar)	Air Consumption at 100PSI CFM	Air Inlet linch	Air Pressure PSI (bar)	Net Weight LBS	Net Weight kg	Air Hose Inch	Nozzle Length cm	Nozzle
SB-501	160(11.0)	1.41	1/4"	90(6.3)	2.92	1.33	3/8"	30	Dual Chuck

SE-1025
FLEXIBLE LED LIGHT

20 pieces in one carton

+ Rechargeable working light 1pc
+ AC 100~240V ADAPTOR*1pc
+ High strength magnet

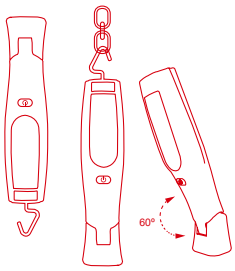

QT-203T / QT-303
AIR TYRE BUFFER / QUICK CHANGE CHUCK
Air inlet : 1/4"

20 pieces in one carton

2pcs Planet Gear with bearing

Stylized grip

QT-112T

AIR TYRE BUFFER

Air inlet : 1/4"

10 pieces in one carton

2pcs Planet Gear with bearing

Stylized grip

QB-802T
QB-802TU For USA

AIR ERASER Spindle Size :3/8"-24

Air inlet : 1/4"

10 pieces in one carton

Stylized grip

QB-812T
QB-812TU For USA

AIR ERASER Spindle Size :3/8"-24

Air inlet : 1/4"

10 pieces in one carton

Stylized grip

QP-415

AIR ANGLE POLISHER

Spindle Size :5/16"-24

Air inlet : 1/4"

10 pieces in one carton

Stylized grip

	Chuck Size inch(mm)	Collet Size A inch B mm	Free Speed R.P.M	Avg. Air Consumption CFM (L/min)	Air Pressure PSI (bar)	Overall Length Inch (mm)	Motor hp	Net Weight LBS(kg)		Air Hose Inch	Sound Pressure dBA	Vibration Level m/s²
QT-112T	----	1/4" / 6	4000	5.0 (141)	90(6.3)	8-27/32"(225)	0.5	1.72	0.78	3/8"	85.0	1.2
QT-203T	Hex.7/16"(11.1)	----	4000	5.0 (141)	90(6.3)	8-27/32"(225)	0.5	1.98	0.90	3/8"	85.0	1.6
QT-303	Hex.7/16"(11.1)	----	22000	5.0 (141)	90(6.3)	8-9/16"(217)	0.5	1.74	0.79	3/8"	85.0	1.6

	Free Speed R.P.M	Avg. Air Consumption CFM (L/min)	Air Pressure PSI (bar)	Overall Length Inch (mm)	Motor HP	Net Weight LBS	kg	Air Hose Inch	Sound Pressure dBA	Vibration Level m/s²
QB-802T	4000	5.0 (141)	90(6.3)	8-5/32"(212)	0.5	3.08	1.40	3/8"	85.0	1.2
QB-812T	4000	5.0 (141)	90(6.3)	8-15/32"(215)	0.5	1.67	0.76	3/8"	85.0	1.2

	Pad Dia inch(mm)	Free Speed R.P.M	Avg. Air Consumption CFM (L/min)	Air Pressure PSI (bar)	Overall Length Inch (mm)	Motor HP	Net Weight LBS(kg)		Air Hose Inch	Sound Pressure dBA	Vibration Level m/s²
QP-415	5"(127)	2500	5.0(141)	90(6.3)	8-11/32"(211)	0.5	2.5	1.14	3/8"	85.0	1.1

WG-202N [SET]

AIR SUCTION & BLOW GUN KIT

Air inlet : 1/4"

10 pieces in one carton

- Use for cleaning or to suctions dust, wood chips, metal shavings, glass, etc.
- This 2 in 1 tool can be used either as air blow gun, or as a air vacuum gun.
- Ergonomically designed for user's comfort.

CONTENTS:

- 1 pc Extension Tube
- 1 pc Small Diameter Vacuum Tube
- 1 pc Flat Tube
- 1 pc Brush
- 1 pc Flexible tube
- 1 pc Deflector
- 1 pc Clamping Ring
- 1 pc Dust Bag

SR-2001-KIT

AIR BRUSH KIT

40 pieces in one carton

CONTENTS:

- 1 Airbrush
- 1 22c.c. Glass Jar
- 1 50c.c. Glass Jar
- 1 55FT(M5 x 0.45) Air Hose
- 1 Adaptor
- 1 Holder
- 1 2c.c. Cup
- 1 8c.c. Cup
- 1 Spanner

FEATURES

- Double-Action Trigger can control the amount of paint.
- Included Airbrush Holder can be placed when idle.
- The air volume can be adjusted through the adjustment button.
- Light-Weight and Ergonomic body can be easily operated with one hand.
- 0.3mm Ultra-Fine Nozzle can easily handle details.

SC-005

BALL JOINT & TIE-ROD SPLITTER SET

10 pieces in one carton

CONTENTS:

- Air Hammer Adapter
- 1-1/8"(28.57mm) Pitman Arm
- Striking Handle
- 11/16"(17.46mm) Tie Rod
- 15/16"(23.81mm) Ball Joint

SR-2101

AIR BRUSH SET

40 pieces in one carton

CONTENTS:

- Air Brush
- Pipette
- Spanner
- Air Adaptor

WG-202

AIR SUCTION & BLOW GUN KIT

Air inlet : 1/4"

20 pieces in one carton

SM-0813

Manual & Fluid Extractor

4 pieces in one carton

SM-0911

Manual &
Pneumatic Fluid Extractor

4 pieces in one carton

SM-0503

Pneumatic Brake
Extractor & Refilled KIT

1 pieces in one carton

SQ-0217

AIR POWERED BRAKE CALIIPER
WIND BACK TOOL-SET 17PCS

- Air Powered Brake Caliper Wind Back Tool : 1pc
- Disk : 16pcs

5 pieces in one carton

Not available in north America

	Air Pressure PSI	Net Weight LB	Net Weight KG	Capacity L
SM-0813	70 -170	6.80	2.7	8.0
SM-0911	70 -170	6.80	3.1	9.5
SM-0503	70 -170	4.12	1.86	3.0

SANDBLASTING GUN

SX-3101

AIR SANDBLAStING GUN

20 pieces in one carton

SX-3102

AIR SANDBLAStING GUN

20 pieces in one carton

SX-3103

AIR SANDBLAStING GUN

10 pieces in one carton

SX-3111

AIR UUDERSEAL GUN

20 pieces in one carton

SX-1615

AIR CLENNING GUN

8 pieces in one carton

SX-3112

AIR UUDERSEAL GUN

50 pieces in one carton

	Cup Capacity L	Free Speed R.P.M	Avg. Air Consumption CFM (L/min)	Air Pressure PSI (bar)	Overall Length Inch (mm)	Net Weight LBS(kg)		Air Hose Inch	Sound Pressure dBA
						lb	kg		
SX-3101	1.0	-----	4.3 (121.8)	90(6.3)	11" (280)	1.26	0.57	3/8"	85.0
SX-3102	0.7	-----	4.0 (113.3)	90(6.3)	10-1/8" (260)	0.77	0.35	3/8"	85.0
SX-3103	-----	-----	3.5 (99.1)	90(6.3)	122" (3100)	2.31	10.5	3/8"	80.0
SX-3111	1.0	-----	3.0 (84.9)	90(6.3)	10-1/8" (260)	0.97	0.44	3/8"	85.0
SX-3112	----	-----	3.0 (84.9)	90(6.3)	10-1/8" (260)	0.48	0.22	3/8"	85.0
SX-1615	1.0	-----	5.0 (141.5)	90(6.3)	11-7/16" (290)	0.9	0.4	3/8"	85.0

SX-2101

AIR TWISTER GUN

10 pieces in one carton

Not available in north America

SX-3301

AIR SOLVENT / CLEANER SPRAY GUN

20 pieces in one carton

SX-3203

1L AIR CLEANING GUN

10 pieces in one carton

SX-4101

SODA BLASTER

10 pieces in one carton

Environmentally Friendly Air Tool

	Cup Capacity L	Free Speed R.P.M	Avg. Air Consumption CFM (L/min)	Air Pressure PSI (bar)	Overall Length Inch (mm)	Net Weight LBS(kg)		Air Hose Inch	Sound Pressure dBA
		No			L	lb	kg		
SX-2101	1.0	5500	2.0 (56.6)	90(6.3)	8-7/32*4-5/16" 210*110mm	1.71	0.78	3/8"	85.0
SX-3301	1.0	-----	10 (300)	90(6.3)	11-13/16"(300)	1.52	0.69	1/4"	-----
SX-3203	1.0	-----	1.0 (28.3)	90(6.3)	18-1/2" (470)	1.17	0.53	3/8"	65.0
SX-4101	0.6	-----	8.0(226.5)	90(6.3)	7-3/4" (197)	0.8	0.36	3/8"	82.0

FILTER REGULATOR LUBRICATOR

SV-1240

FILTER,REGULATOR
Air inlet : 1/4"

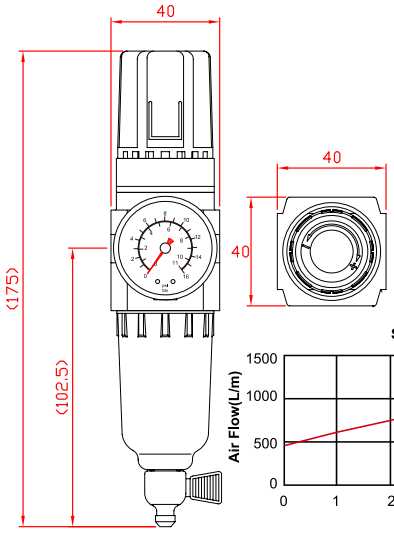

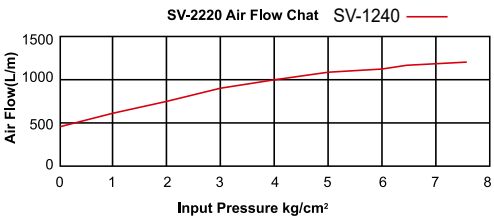

SV-2230/2330

FILTER,REGULATOR,LUBRICATOR
Air inlet : 1/4" / 3/8"

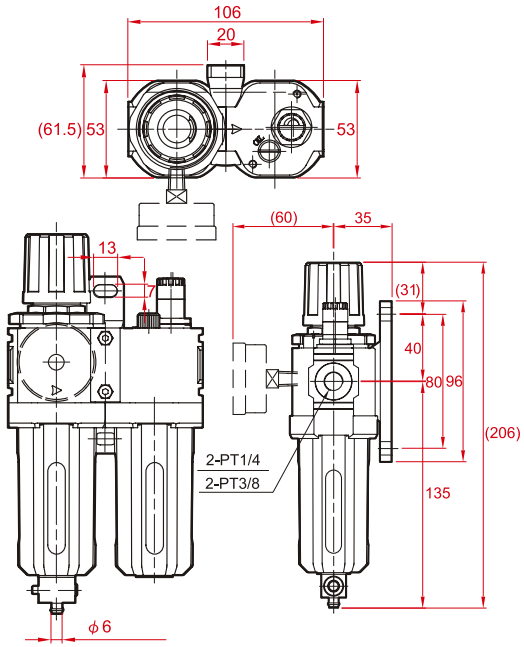

SV-2220

FILTER,REGULATOR,LUBRICATOR
Air inlet : 1/4"

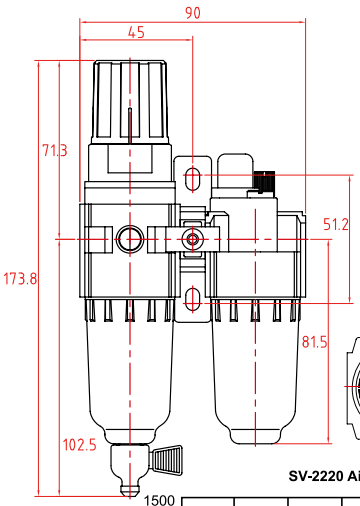

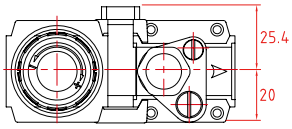

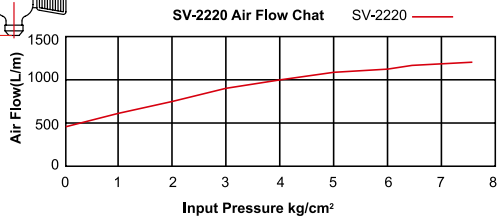

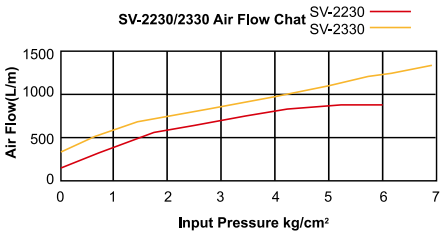

	Air in / outlet	Max Input Pressure	Max Output Pressure	Max.Flow	Working Temperature	Drain Capacity	Oil Capacity	Filter Element
	inch	PSI	PSI	L/min	°C	ml	ml	μ (micro)
	—	—	—	—	Working	—	—	
SV-1240	1/4"	150	145	1100	5~60˚	15	-----	5μ
SV-2230	1/4"	215	70-140	1100	5~60˚	30	55	5μ
SV-2330	3/8"	215	70-140	1100	5~60˚	30	55	5μ
SV-2220	1/4"	150	70-140	1100	5~60˚	15	30	5μ

FILTER REGULATOR LUBRICATOR

SV-2431

FILTER,REGULATOR,LUBRICATOR

Air inlet : 1/2"

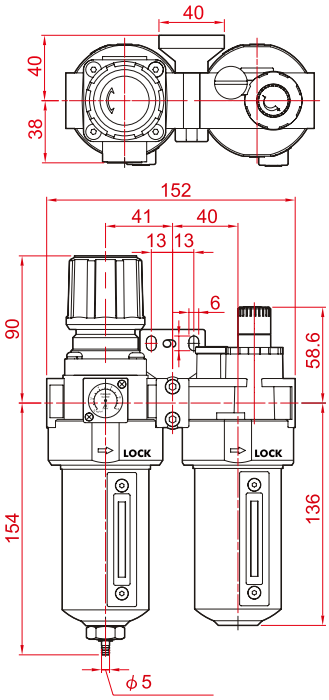

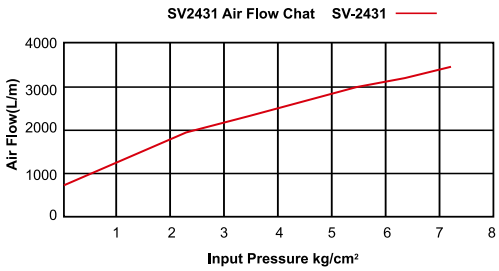

SV-1260

FILTER,REGULATOR

Air inlet : 1/4"

SV-1360

FILTER,REGULATOR

Air inlet : 3/8"

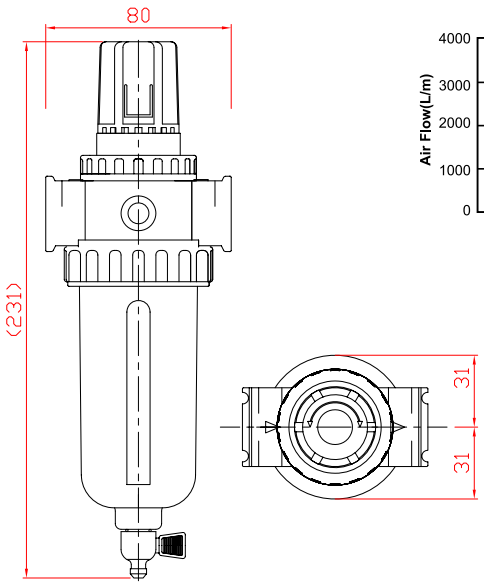

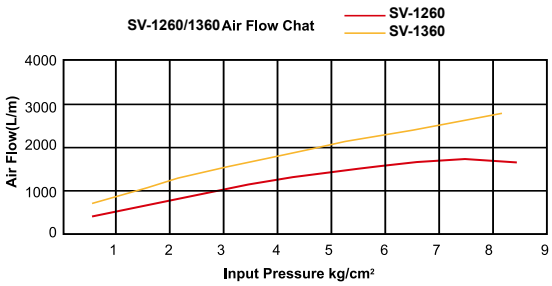

SV-2260 /2280

FILTER,REGULATOR,LUBRICATOR

Air inlet : 1/4"

SV-2360 /2380

FILTER,REGULATOR,LUBRICATOR

Air inlet : 3/8"

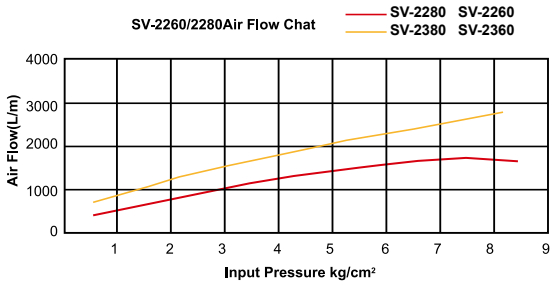

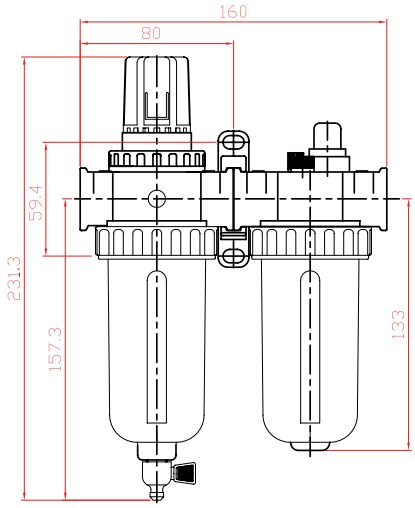

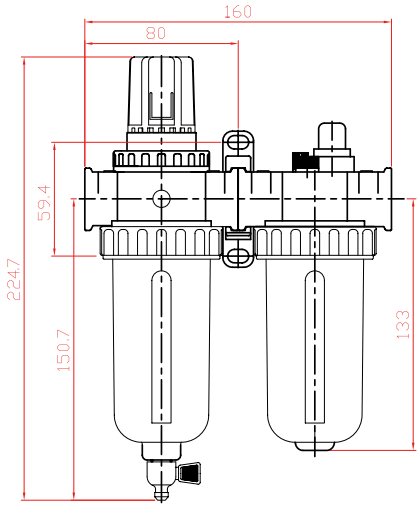

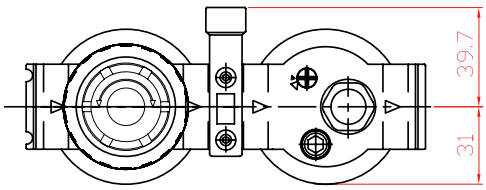

	Air in / outlet inch	Max Input Pressure PSI	Max Output Pressure PSI	Max.Flow L/min	Working Temperature °C	Drain Capacity ml	Oil Capacity ml	Filter Element μ (micro)
	—	—	—	—	Working	—	—	
SV-1260	1/4"	215	145	1750	5~60˚	80	-----	5μ
SV-1360	3/8"	215	145	2500	5~60˚	80	-----	5μ
SV-2431	1/2"	285	70-140	1100	5~60˚	80	200	5μ
SV-2260/2360	1/4" / 3/8"	215	70-150	1750 / 2500	5~60˚	80	150	5μ
SV-2280/2380	1/4" / 3/8"	250	70-140	1750 / 2500	5~60˚	80	150	5μ

FILTER REGULATOR LUBRICATOR

SV-3260 / 3360

FILTER,REGULATOR,LUBRICATOR

Air inlet : 1/4" , 3/8"

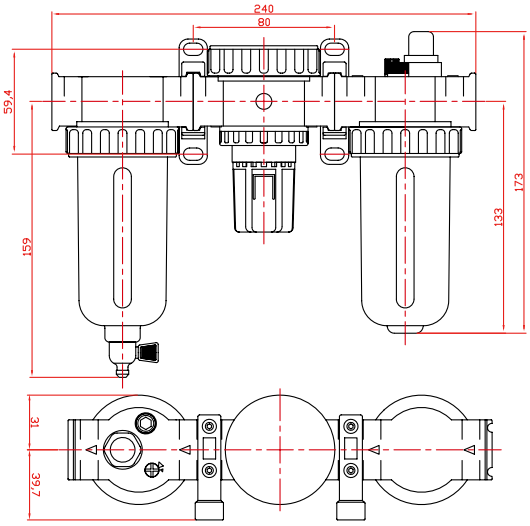

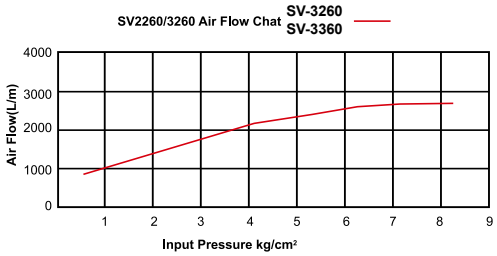

SV-3460

FILTER,REGULATOR,LUBRICATOR

Air inlet : 1/2"

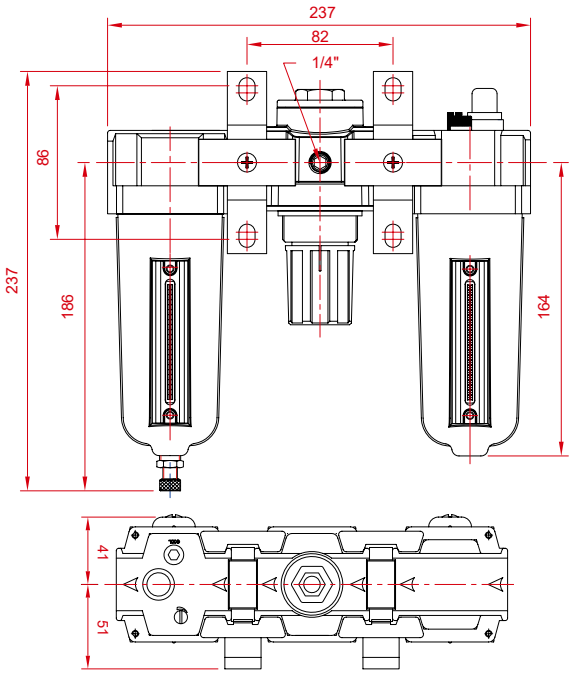

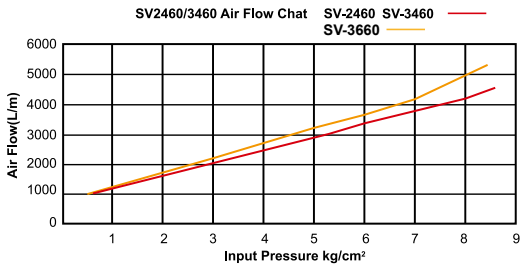

SV-1460

FILTER,REGULATOR,LUBRICATOR

Air inlet : 1/2"

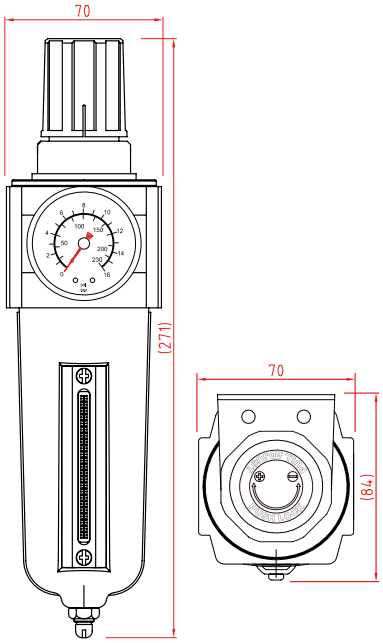

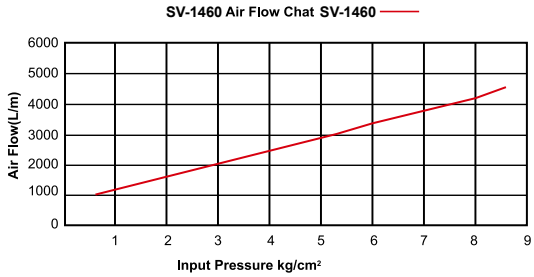

SV-2460

FILTER,REGULATOR,LUBRICATOR

Air inlet : 1/2"

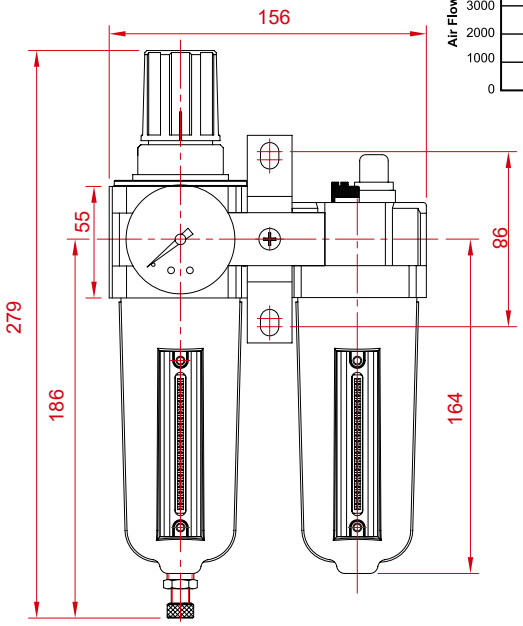

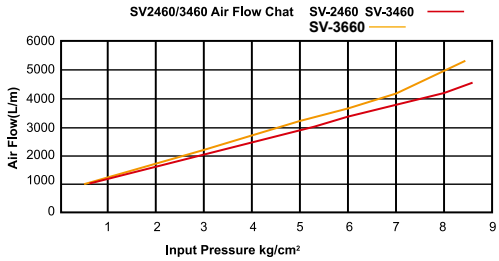

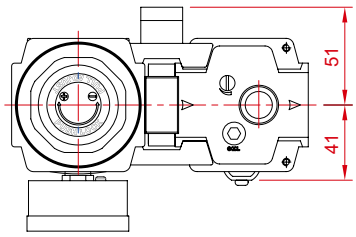

	Air in / outlet inch	Max Input Pressure PSI	Max Output Pressure PSI	Max.Flow L/min	Working Temperature °C	Drain Capacity ml	Oil Capacity ml	Filter Element μ (micro)
	—	—	—	—	Working	—	—	
SV-1460	1/2"	215	145	3000	5~60˚	80	-----	5μ
SV-2460	1/2"	250	7-215	4000	5~60˚	80	150	5μ
SV-3260/3360	1/4" / 3/8"	215	70-150	1750 / 2500	5~60˚	80	150	5μ
SV-3460	1/2"	250	7-215	4000	5~60˚	80	150	5μ

FILTER REGULATOR LUBRICATOR

SV-1660

FILTER,REGULATOR,LUBRICATOR

Air inlet : 3/4"

SV-1860

FILTER,REGULATOR,LUBRICATOR

Air inlet : 1"

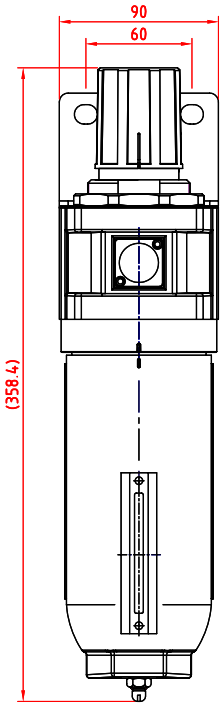

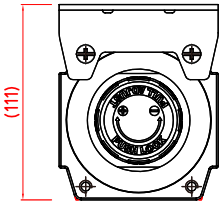

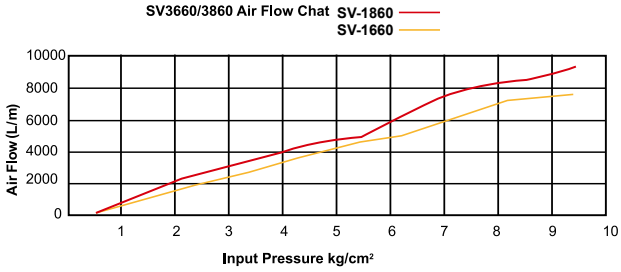

SV-3660/3860

FILTER,REGULATOR,LUBRICATOR

Air inlet : 3/4" / 1"

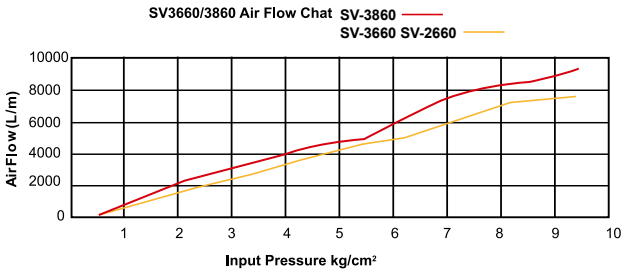

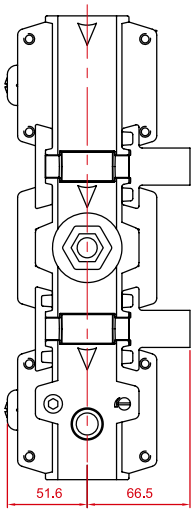

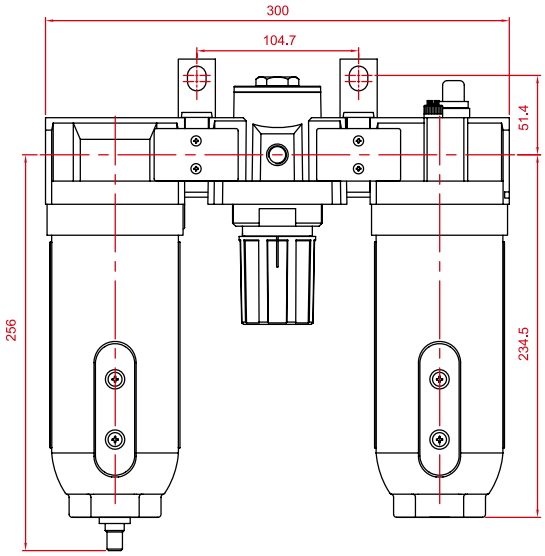

SV-2660/2860

FILTER,REGULATOR,LUBRICATOR

Air inlet : 3/4" / 1"

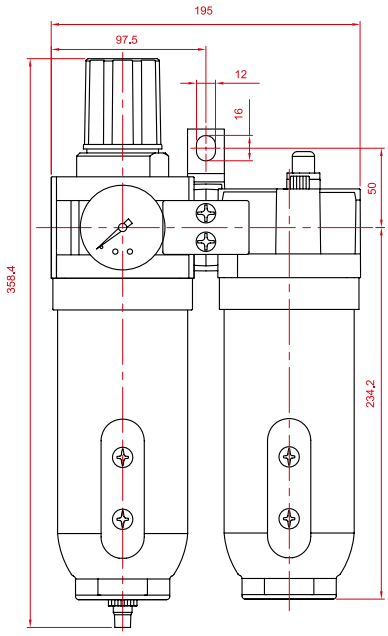

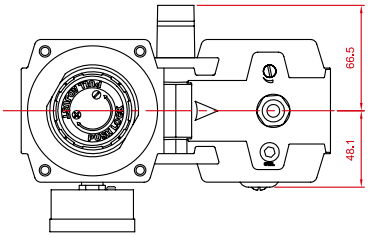

SW-12(1/4")
SW-13(3/8")

Mini Lubricator

- Install in the air hose to provide automatic lubrication.
- 8c.c. Lubricating oil capacity.

	Air in / outlet inch	Max Input Pressure PSI	Max Output Pressure PSI	Max.Flow L/min	Working Temperature °C	Drain Capacity ml	Oil Capacity ml	Filter Element μ (micro)
	—	—	—	—	Working	—	—	
SV-1660	3/4"	250	225	4600	5~60˚	300	-----	5μ
SV-1860	1"	250	225	5200	5~60˚	300	-----	5μ
SV-2660/2860	3/4" / 1"	250	225	4600 /5200	5~60˚	300	300	5μ
SV-3660/3860	3/4" / 1"	250	225	4600 /5200	5~60˚	300	350	5μ

AIR HOSE REEL

SA-2015

AIR HOSE REEL

- "Commercial grade auto-rewind air hose reels have features like steel construction, heavy-duty hoses, Durable spring-powered recoil and 16 teeth gear to ensure repeated use and reliability."

Case Material : Steel
Air inlet : 1/4" - Male

SA-3215
SA-3315

AIR HOSE REEL
Case Material : Shock-proof plastic
Air inlet : 1/4" - Male

SA-4320

AIR HOSE REEL
Case Material : Steel
Air inlet : 3/8" - Male

SA-4420

AIR HOSE REEL
Case Material : Steel
Air inlet : 1/2" - Male

SD-23/SD-24

POLYURETHANE RECOIL AIR-HOSE

- Returns automatically to the original position and keeps it out of operator's way during operation.
- Spring guards protects both ends of the hose. Both ends have male 360˚ swivel fittings.
  Temperature resistance from -20˚ C ~ +70˚ C.

SD-22

8 X 12 AIR HOSE

- 24 braids covered PU tube brings the anti-explosion capability up to 350 psi.
- Spring guards protects both ends of the hose. Both ends have male 360˚ swivel fittings.
- Temperature resistance from -20˚ C ~ +70˚ C.

	Hose Inside Diameter mm	Hose outside Diameter mm	Hose Length M	Working Pressure PSI(bar)	Maximum Pressure PSI(bar)	Male PT Fitting inch	Weight kg
SA-2015	8.0	12.0	15	101.5 (7.0)	284.4(17.8)	1/4"	6.2
SA-3215	8.0	12.0	15	90 (6.3)	300(20.7)	1/4"	5.0
SA-3315	10.0	15.0	15	90 (6.3)	300(20.7)	3/8"	6.0
SA-4320	10.0	18.0	20	90 (6.3)	300(20.7)	3/8"	24.0
SA-4420	13.0	23.0	20	90 (6.3)	300(20.7)	1/2"	29.0
SD-22107	8.0	12.0	7.5	101.5 (7.0)	284.4(17.8)	1/4"	0.8
SD-22115	8.0	12.0	15	101.5 (7.0)	284.4(17.8)	1/4"	1.4
SD-22130	8.0	12.0	30	101.5 (7.0)	284.4(17.8)	1/4"	2.6
SD-23110	8.0	12.0	10	101.5 (7.0)	284.4(17.8)	1/4"	0.8
SD-23115	8.0	12.0	15	101.5 (7.0)	284.4(17.8)	1/4"	1.2
SD-23210	5.0	8.0	10	101.5 (7.0)	284.4(17.8)	1/4"	0.4
SD-23215	5.0	8.0	15	101.5 (7.0)	284.4(17.8)	1/4"	0.6
SD-23315	10	15.0	15	101.5 (7.0)	284.4(17.8)	3/8"	1.9
SD-24415	13	18.0	15	101.5 (7.0)	284.4(17.8)	1/2"	2.1

WORKING CHAIR

ST-14B7-T

7-Drawer Roll-Wagon

1 pieces in one carton

FEATURES

- Four corner aluminum alloy metal trim mounted.
- Soft cart handle.
- High-density EVA cushion on the table top.
- With drawer lock.
- 360° caster with wheel lock.
- For 5"x2" casters with brake.

	LENGTH (MM)	WIDTH (MM)	HEIGHT (MM)
CABINET	770	460	960
DRAWER	576 576	380 380	75 154

ST-10C521
ST-10C522S

user DIY assembled mobile working chair

- Color: red/black anti scratch paint
- Seat cushion materials: high graded artificial PVC leather with sponge
- Product sizes: long 350mm width 260mm height 240mm, excl.
- wheels Drawer height: 70mm
- Product feature: storage daily needed tools reduce squatting fatigue, movable willingly.

ST-10C522
1 Drawer Design

ST-10C521

TORQUE WRENCH

ADJUSTABLE TORQUE WRENCH BACK TURNING TYPE

1/2" TORQUE WRENCH,Window display. Nm / ft-lb scale, Back Turning

TW-402102N / TW-404202N / TW-406302N / TW-408402N

3/4" TORQUE WRENCH,Window display. Nm / ft-lb scale, Back Turning

TW-611552N / TW-615752N

Accuracy of torque +/- 4% DIN ISO-6789 AMSE B107.14-2004

10 pieces in one carton

Professional Reversible Series Torque Wrench

Window display. Nm / ft-lb scale, Back Turning

TW-210222 / TW-310552 / TW-411102 / TW-412202

24 pieces in one carton | **24** pieces in one carton | **10** pieces in one carton | **10** pieces in one carton

±3% ACCURACY

Classic Series Torque Wrench

TE-205025N / TE-225250N / TE-305025N / TE-320110N / TE-442210N
TE-428210N / TE-450350N

1/2" Torque Wrench,42-210Nm, Engrave Nm / ft-lb scale

Accuracy of torque +/- 4% ; Quality meets DIN ISO 6789 & ASME B107.300-2010

12 pieces in one carton

Micro-Adjustable Torque Wrench Series

TB-205025N / TB-305025N / TB-320110N / TB-420210N /TB-450350N
TB-610060N / TB-615080N / TB-620100N

±4% ACCURACY

☆Professional Reversible Series Torque Wrench

TD-205025 / TD-305050 / TD-410100 / TD-420200 / TD-610060

☆☆ Professional Series Torque Wrench

3/4" Torque Wrench,Window display. Nm / ft-lb scale, Back Turning

TW-611602 / TW-611802 / TW-612102

2 pieces in one carton

☆☆ Classic Series Torque Wrench

1/2" Drive FLEX-HEAD TORQUE WRENCH

TF-310080N / TF-430250N

☆☆ Professional Reversible Series Torque Wrench

3/8" Drive FLEXIBLE SPLIT-BEAM TORQUE WRENCH

TS-320100N / TS-440250N

TORQUE WRENCH

Professional Reversible Series Torque Wrench

Micro-Adjustable Torque Wrench Series

Classic Series Torque Wrench

	Drive	Torque Range (Nm)	Torque Range (ft-lb)	Torque Range (in-lb)	Indicator	Torque Adjusting	D mm	H mm	L mm	Weight kg
TW-402102N	1/2"	20-100	15-75	-----	Magnifying glass	Back Turning	40.5	40	405	1.02
TW-404202N	1/2"	40-200	30-150	-----	Magnifying glass	Back Turning	40.5	40	500	1.20
TW-406302N	1/2"	60-300	45-200	-----	Magnifying glass	Back Turning	40.5	40	595	1.33
TW-408401N	1/2"	80-400	60-300	-----	Magnifying glass	Back Turning	40.5	40	680	1.82
TW-611552N	3/4"	110-550	75-405	-----	Magnifying glass	Back Turning	63.0	58	970	3.70
TW-615752N	3/4"	150-750	112.5-555	-----	Magnifying glass	Back Turning	63.0	58	1150	5.60
TW-210222	1/4"	2-25	1.5-18	-----	Magnifying glass	Back Turning	28.0	23	296	0.41
TW-310552	3/8"	5-50	3.5-37	-----	Magnifying glass	Back Turning	28.0	28	333	0.47
TW-411102	1/2"	10-100	8-75	-----	Magnifying glass	Back Turning	40.5	40	400	0.82
TW-412202	1/2"	20-200	10-150	-----	Magnifying glass	Back Turning	40.5	40	500	1.3
TE-205025N	1/2"	5-25	-----	53.1-212.4	Engrave	Rotating	32	31.8	275	0.59
TE-225250N	1/4"	2.8-28.2	-----	25-250	Engrave	Rotating	32	31.8	275	0.59
TE-305025N	3/8"	5-25	-----	53.1-212.4	Engrave	Rotating	32	31.8	370	0.83
TE-320110N	3/8"	20-110	14.8-81.1	-----	Engrave	Rotating	32	31.8	370	0.83
TE-442210N	1/2"	42-210	30.6-155	-----	Engrave	Rotating	46.3	33	450	1.32
TE-428210N	1/2"	28-210	20.7-154.9	-----	Engrave	Rotating	46.3	33	570	1.65
TE-450350N	1/2"	50-350	36.9-258.1	-----	Engrave	Rotating	46.3	33	450	1.31
TB-205025N	1/4"	5-25	-----	53.1-212.4	Engrave	Rotating	32	31.8	281	0.53
TB-305025N	3/8"	5-25	-----	53.1-212.4	Engrave	Rotating	32	31.8	361	0.77
TB-320110N	3/8"	20-110	18.5-77.5	-----	Engrave	Rotating	32	31.8	361	0.77
TB-420210N	1/2"	20-210	18.4-151.2	-----	Engrave	Rotating	40.5	40	461	1.25
TB-450350N	1/2"	50-350	48.0-247.2	-----	Engrave	Rotating	40.5	40	553	1.59
TB-610060N	3/4"	100-600	92.0-424	-----	Engrave	Rotating	63	58	1010	2.41
TB-615080N	3/4"	150-800	129-572	-----	Engrave	Rotating	63	58	1010	2.41
TB-620100N	3/4"	200-1000	166-719	-----	Engrave	Rotating	63	58	1010	2.41
TD-202025	1/4"	2-25	-----	53.1-212.4	Magnifying glass	Back Turning	40.5	40	296	0.41
TD-305050	3/8"	5-50	3.5-36.9	-----	Magnifying glass	Back Turning	40.5	40	333	0.47
TD-410100	1/2"	10-100	8-75	-----	Magnifying glass	Back Turning	40.5	40	445	1.1
TD-420200	1/2"	20-200	10-150	-----	Magnifying glass	Back Turning	40.5	40	513	1.28
TD-610060	3/4"	100-600	75-440	-----	Magnifying glass	Back Turning	40.5	40	1040	4.65
TW-611602	3/4"	100-600	75-440	-----	Magnifying glass	Back Turning	63	58.5	1040	4.65
TW-611802	3/4"	150-800	110-590	-----	Magnifying glass	Back Turning	63	58.5	1240	5.45
TW-612102	3/4"	200-1000	150-740	-----	Magnifying glass	Back Turning	63	58.5	1240	5.45

	Drive	Torque Range (Nm)	Torque Range (ft-lb)	Indicator	Torque Adjusting	D mm	H mm	L mm	Weight kg
TF-310080N	1/2"	-----	10-80	Engrave	Rotating	36.8	30.4	465	1.11
TF-430250N	1/2"	-----	30-250	Engrave	Rotating	43.3	40.5	640	1.94

	Drive	Torque Range (Nm)	Torque Range (ft-lb)	Indicator	Torque Adjusting	D mm	H mm	L mm	Weight kg
TS-320100N	3/8"	-----	20-100	Engrave	Flexible	35.2	27.8	476	0.95
TS-440250N	3/8"	-----	40-250	Engrave	Flexible	44.1	36.1	590	1.7

TE-81N / TE-82N
TE-83N / TE-84N / TE-85N

1" Torque Wrench,Engrave. Nm / ft-lb scale

- Products conform to international standards - DIN 6789 / ASME B107
- Reversible torque wrench for bi-directional tightening
- Torque Spring made by alloy steel, provide stability and durability.
- Customized torque scale available

	Drive	Torque Range	Torque Range	Indicator	Torque Adjusting	D	H	L	Weight
	inch	(Nm)	(ft-lb)			mm	mm	mm	kg
TE-815080N	1"	150~800	129~572	Engraved	Rotating	---	---	1240	6.1
TE-820100N	1"	200~1000	166~719	Engraved	Rotating	70.2	72.1	1240	6.4
TE-830150N	1"	300~1500	258~1070	Engraved	Rotating	---	---	1850	10.6
TE-840200N	1"	400~2000	369~1402	Engraved	Rotating	---	---	2300	18.3
TE-850250N	1"	500~2500	443~1771	Engraved	Rotating	74.5	66.1	2755	19.6

TM-0416
TM-0418

TORQUE MULTIPLIER

- Works with high transmission efficiency by planet gears
- 5:1 torque multiplication
- Multiplication accuracy ±5%
- Supplied with 2 reaction bar styles

TM-0428-1
TM-0428-2

TORQUE MULTIPLIER

- Multiplication deviation less than ±5%
- Mechanism with high ratio gearbox 26:1
- High ratios offer benefits without using long lever arms or heavy wrenches
- Supplied with 2 different reaction bar
- Durable construction without maintenance necessary and long lifetime

	Input Square	Output Square	Max Rated Output	Ratio	Net Weight	
	Inch	Inch	FT-LB(Nm)		LBS	kg
TM-0416	1/2"	3/4"	1100(1500)	5 : 1	14.2	6.48
TM-0418	1/2"	1"	1100(1500)	5 : 1	14.2	6.48
TM-0428-1	1/2"	1"	2200(3000)	15.5 : 1	25.4	11.5
TM-0428-2	1/2"	1"	3300(4500)	26 : 1	28.7	13

IMPACT SOCKET

IMPACT SOCKET

IMPACT SOCKET

MB34012S

12PC 3/8" Drive Impact Socket Set

12 pieces in one carton

Contents : 5/16",3/8",7/16",1/2",9/16",5/8",11/16",3/4", 13/16",7/8" ,15/16",1"

MB34013M

13PC 3/8" Drive Impact Socket Set

12 pieces in one carton

Contents :6mm,8mm,9mm,10mm,11mm,12mm,13mm, 14mm,15mm,16mm,17mm,18mm,19mm

MB35012S

12PC 3/8" Drive Deep Impact Socket Set

8 pieces in one carton

Contents :5/16",3/8",7/16",1/2",9/16",5/8",11/16",3/4", 13/16",7/8" ,15/16",1"

MB35013M

13PC 3/8" Drive Deep Impact Socket Set

8 pieces in one carton

Contents :6mm,8mm,9mm,10mm,11mm,12mm,13mm, 14mm,15mm,16mm,17mm,18mm,19mm

MB43015M

15PC 1/2" Drive Deep Impact Socket Set

6 pieces in one carton

Contents :10mm 11mm 12mm 13mm 14mm 15mm 16mm 17mm 19mm 21mm 22mm 24mm 27mm 30mm 32mm

MB44013S

13PC 1/2" Drive Impact Socket Set

6 pieces in one carton

Contents :7/16",1/2",9/16",5/8",11/16",3/4",13/16", 7/8" ,15/16",1",1-1/16", 1-1/8" 1-1/4"

MB44014M

14PC 1/2" Drive Impact Socket Set

8 pieces in one carton

Contents :10mm,11mm,12mm,13mm,14mm,15mm,16mm, 17mm,18mm,19mm,21mm,22mm,26mm,27mm

MB45010M

10PC 1/2" Drive Deep Impact Socket Set

6 pieces in one carton

Contents :10mm,12mm,13mm,14mm,15mm,17mm,19mm, 21mm,24mm,27mm

MB45013S

13PC 1/2" Drive Deep Impact Socket Set

4 pieces in one carton

Contents :7/16",1/2",9/16",5/8",11/16",3/4",13/16", 7/8" ,15/16",1",1-1/16",1-1/8",1-1/4"

MB64008S

8PC 3/4" Drive Impact Socket Set

4 pieces in one carton

Contents :1",1-5/16",1-1/16",1-3/8",1-1/8",1-7/16" 1-1/4",1-1/2"

MB64008M

14PC 3/4" Drive Impact Socket Set

4 pieces in one carton

Contents : 26mm,27mm,29mm,30mm,32mm,33mm 35mm,36mm

MB45014M

14PC 1/2" Drive Deep Impact Socket Set

4 pieces in one carton

Contents :10mm,11mm,12mm,13mm,14mm,15mm,16mm, 17mm,18mm,19mm,21mm,22mm,26mm,27mm

MB64008SP

8PC 3/4" Drive Impact Socket Set

4 pieces in one carton

Contents : 3/4", 7/8", 15/16" , 1-1/16" , 1-3/16" , 1-1/4" , 1-7/16" , 1-1/2"

IMPACT SOCKET

MB65008S

8PCS 3/4" DRIVE DEEP IMPACT SOCKET SET

2 pieces in one carton

Contents : 1",,1-1/16",1-1/8",1-1/4",1-5/16",1-3/8",1-7/16",1-1/2"

MB66006S
MB66006M

6PCS 3/4" SAE Impact Hex Driver SET 100mm Length

5 pieces in one carton

Contents :
S : 1/2", 9/16" , 5/8" , 3/4" , 7/8" , 1"
M : H12 , H14 , H17 , H19 , H22 , H24

MB65008S1

8PCS 3/4" DRIVE DEEP IMPACT SOCKET SET

2 pieces in one carton

Contents : 3/4",7/8",15/16",1",1-1/16",1-1/18",1-3/16",1-1/4"

MB65008M

8PCS 3/4" DRIVE DEEP IMPACT SOCKET SET

4 pieces in one carton

Contents :26mm,27mm,29mm,30mm,32mm,33mm 35mm,36mm

MB44008S

8PCS 1/2" DRIVE SAE IMPACT HEX DRIVE SET(LENGTH 78mm)

12 pieces in one carton

Contents :1/4", 5/16", 3/8", 7/16" ,1/2" ,9/16" ,5/8" ,3/4"

MB44008M

1/2" DRIVE SAE IMPACT HEX DRIVE SET

12 pieces in one carton

Contents :H6, H7, H8, H10, H12 ,H14 ,H17, H19

ME011N

IMPACT ADAPTER
IMPACT UNIVERSAL JOINT

6 pieces in one carton

IMPACT ADAPTER
Contents : 1/4"Fx3/8"M, 3/8"Fx1/4"M, 3/8"Fx1/2"M, 1/2"Fx3/8"M, 1/2"Fx3/4"M, 3/4"Fx1/2"M, 3/4"Fx1"M, 1"Fx3/4"M

IMPACT UNIVERSAL JOINT
Contents : 1/4"Dr, 3/8"Dr, 1/2"Dr

MA8050

5 PCS 1" Dr. COMBINATION BUDD WHEEL IMPACT SOCKET SET

4 pieces in one carton

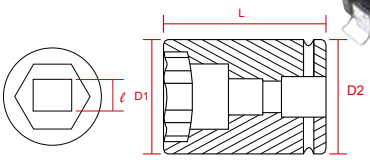

MA42015

15pcs 1/2"Driver Stubby Metric Size impact Socket SET

12 pieces in one carton

MA42006M

1/2"Duive Stubby Metric Size impact Socket SET

MA42006S

1/2"Duive Stubby Inch Size impact Socket SET

MA42026

26 PCS 1/2" DRIVE STUBBY METRIC IMPACT SOCKET SET

Contents :
S : 5/16", 3/8", 7/16", 1/2", 9/16", 5/8", 11/16", 3/4", 13/16", 7/8", 15/16"
M : 10mm,11mm,12mm,13mm,14mm,15mm,16mm,17mm,18mm,19mm,20mm, 21mm,22mm,23mm,24mm

M7 NO.	⬢	D1	D2		L	⚖	📦
	mm	mm	mm	mm	mm	g	
MA812S4826	1-1/2"	57	57	13/16"	99	1.34	1/1
MA812M3517	35	52	54	17	94	1.10	1/1
MA812M3820	38	54	56	20	96	1.18	1/1
MA812M4121	41	54	58	21	99	1.19	1/1
MA831M33L	33	52	52		90	1.01	1/1
MA8050	---	---	---	---	---	6.20	1/4

M7 NO.	○	D1	D2	T	L	⚖	📦
	mm	mm	mm	mm	mm	g	
MA401M10	10	18	25	5	28	50	15/10
MA401M11	11	18	25	5	28	50	15/10
MA401M12	12	19	25	5	28	50	15/10
MA401M13	13	20	25	5	28	52	15/10
MA401M14	14	22	25	5	28	53	15/10
MA401M15	15	23	25	5	28	55	15/10
MA401M16	16	25	25	8	28	62	15/10
MA401M17	17	26	26	8	28	67	15/10
MA401M18	18	28	28	8	28	82	15/10
MA401M19	19	28	28	9	28	75	15/10
MA401M20	20	30	30	9	28	90	15/10
MA401M21	21	30	30	9	28	86	15/10
MA401M22	22	32	30	9	28	94	15/10
MA401M23	23	34	30	9	28	102	15/10
MA401M24	24	34	30	9	28	98	15/10

M7 NO.	○	D1	D2	ℓ	L	⚖	📦
	mm	mm	mm	mm	mm	g	
MA401M13	13	20	25	5	28	54	6/40
MA401M17	17	26	26	8	28	70	6/40
MA401M19	19	28	28	9	28	80	6/40
MA401M21	21	30	30	9	28	90	6/40
MA401M22	22	32	30	9	28	100	6/40
MA401M24	34	34	30	9	28	110	6/40

M7 NO.	○	D1	D2	ℓ	L	⚖	📦
	inch	mm	mm	mm	mm	g	
MA401S16	1/2"	20	25	5	28	51	6/40
MA401S18	9/16"	22	25	5	28	54	6/40
MA401S20	5/8"	25	25	8	28	61	6/40
MA401S22	11/16"	26	25	8	28	90	6/40
MA401S24	3/4"	28	30	9	28	100	6/40
MA401S28	7/8"	32	30	9	28	95	6/40

MA4030

3 PCS 1/2" DR. DEEP IMPACT SOCKET SET

24 pieces in one carton

- Contents : 17mm, 19mm, 21mm By identifying the different color coated, the operator can easily pick up the size needed.
- With the external sheath, the working object can be well protected from being rubbed, scratched,impacted…etc.
- With the 85mm extra long socket, to loosen or tighten bolt or nut in deeper hole become easier and convenient.

Note: Impact socket for aluminum rim wheel nuts, with polymeric material insets.

MA4031M85

3 PCS 1/2" DR. DEEP THIN WALL IMPACT SOCKET SET

20 pieces in one carton

STRENGTHEN STEEL SLEEVE

3PCS 17mm.19mm.21mm

IMPACT SOCKET

PROVIDE FULL RANGE
ALL SERIES HANG TAG.

IMPACT SOCKET

MALE ADAPTER

IMPACT DEEP SOCKET

UNIVERSAL JOINT

IMPACT HEX BIT

EXTENSION BAR

1/4"MA211M

Impact Standard Socket

- 1/4" drive standard Length
- 6 points
- Metric size

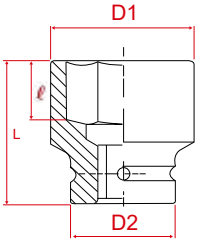

M7 NO.	⬡	D1	D2	ℓ	L	⚖	📦
	mm	mm	mm	mm	mm	g	
MA211M04	4	7.5	13.0	5	23	16	10
MA211M05	5	8.7	13.0	6	23	16	10
MA211M06	6	9.9	13.0	8	23	15	10
MA211M07	7	11.1	13.0	8	23	14	10
MA211M08	8	12.3	13.0	8	23	14	10
MA211M09	9	13.8	13.0	8	23	14	10
MA211M10	10	14.5	13.0	8	23	15	10
MA211M11	11	16.0	13.0	8	23	17	10
MA211M12	12	17.0	13.0	8	23	17	10
MA211M13	13	18.8	13.0	8	23	20	10
MA211M14	14	20.0	13.0	8	23	21	10

1/4"MA211S

Impact Standard Socket

- 1/4" drive standard Length
- 6 points
- Inch size

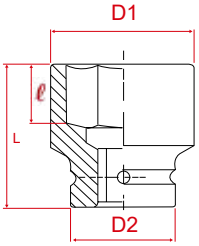

M7 NO.	⬡	D1	D2	ℓ	L	⚖	📦
	inch	mm	mm	mm	mm	g	
MA211S06	3/16"	8.4	13.0	6	23	15	10
MA211S07	7/32"	9.4	13.0	6	23	16	10
MA211S08	1/4"	10.3	13.0	8	23	15	10
MA211S09	9/32"	11.3	13.0	8	23	15	10
MA211S10	5/16"	12.3	13.0	8	23	14	10
MA211S11	11/32"	13.8	13.0	8	23	14	10
MA211S12	3/8"	14.5	13.0	8	23	15	10
MA211S14	7/16"	16.0	13.0	8	23	16	10
MA211S16	1/2"	18.8	13.0	8	23	19	10
MA211S18	9/16"	19.8	13.0	8	23	21	10

1/4"MA231M

Impact Deep Socket

- 1/4" drive Deep Length
- 6 points
- Metric size

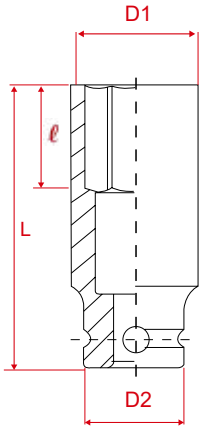

M7 NO.	⬡	D1	D2	ℓ	L	⚖	📦
	mm	mm	mm	mm	mm	g	
MA231M04	4	7.5	13.0	7	50	28	10
MA231M05	5	8.7	13.0	9	50	29	10
MA231M06	6	9.9	13.0	11	50	31	10
MA231M07	7	11.1	13.0	11	50	31	10
MA231M08	8	12.3	13.0	13	50	31	10
MA231M09	9	13.8	13.0	13	50	37	10
MA231M10	10	14.5	13.0	13	50	37	10
MA231M11	11	16.0	13.0	13	50	41	10
MA231M12	12	17.0	13.0	13	50	43	10
MA231M13	13	18.8	13.0	13	50	58	10
MA231M14	14	20.0	13.0	13	50	60	10

1/4"MA231S

Impact Deep Socket

- 1/4" drive Deep Length
- 6 points
- Inch size

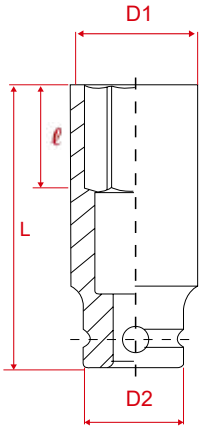

M7 NO.	⬡	D1	D2	ℓ	L	⚖	📦
	inch	mm	mm	mm	mm	g	
MA231S06	3/16"	8.4	13.0	9	50	29	10
MA231S07	7/32"	9.4	13.0	9	50	30	10
MA231S08	1/4"	10.3	13.0	11	50	31	10
MA231S09	9/32"	11.3	13.0	11	50	32	10
MA231S10	5/16"	12.3	13.0	13	50	32	10
MA231S11	11/32"	13.8	13.0	13	50	37	10
MA231S12	3/8"	14.5	13.0	13	50	41	10
MA231S14	7/16"	16.0	13.0	13	50	41	10
MA231S16	1/2"	18.8	13.0	13	50	56	10
MA231S18	9/16"	19.8	13.0	13	50	61	10

3/8"MA311M

Impact Standard Socket

- 3/8" drive standard Length
- 6 points
- Metric size

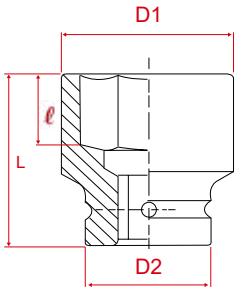

M7 NO.	⬡	D1	D2	ℓ	L	⚖	📦
	mm	mm	mm	mm	mm	g	
MA311M06	6	10.0	19.0	9	29.5	31	10
MA311M07	7	11.4	19.0	9	29.5	31	10
MA311M08	8	12.7	19.0	9	29.5	31	10
MA311M09	9	14.0	19.0	10	29.5	33	10
MA311M10	10	15.2	19.0	10	29.5	33	10
MA311M11	11	17.0	19.0	11	29.5	34	10
MA311M12	12	18.0	19.0	11	29.5	35	10
MA311M13	13	19.0	19.0	11	29.5	36	10
MA311M14	14	20.0	19.0	11	29.5	37	10
MA311M15	15	21.9	19.0	13	29.5	42	10
MA311M16	16	23.5	22.0	13	30.0	57	10
MA311M17	17	25.0	22.0	13	30.0	59	10
MA311M18	18	26.0	22.0	13	30.0	61	10
MA311M19	19	27.0	22.0	15	30.0	63	10
MA311M20	20	28.0	22.0	15	30.0	79	10
MA311M21	21	30.0	22.0	15	30.0	79	10
MA311M22	22	32.0	22.0	15	30.0	98	10
MA311M23	23	33.0	22.0	15	30.0	98	10
MA311M24	24	34.0	22.0	15	30.0	98	10

3/8"MA311S

Impact Standard Socket

- 3/8" drive standard Length
- 6 points
- Inch size

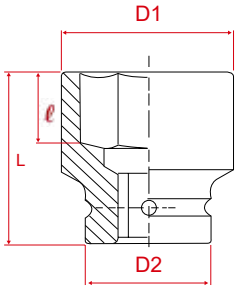

M7 NO.	⬡	D1	D2	ℓ	L	⚖	📦
	inch	mm	mm	mm	mm	g	
MA311S10	5/16"	12.6	19.0	9.0	29.5	31	10
MA311S12	3/8"	14.6	19.0	10.0	29.5	33	10
MA311S14	7/16"	17.1	19.0	11.0	29.5	33	10
MA311S16	1/2"	19.0	19.0	11.0	29.5	37	10
MA311S18	9/16"	20.0	19.0	11.0	29.5	39	10
MA311S20	5/8"	23.5	22.0	13.0	30.0	54	10
MA311S22	11/16"	25.0	22.0	13.0	30.0	56	10
MA311S24	3/4"	27.0	22.0	15.0	30.0	63	10
MA311S26	13/16"	30.0	22.0	15.0	30.0	79	10
MA311S28	7/8"	32.0	22.0	15.0	30.0	87	10
MA311S30	15/16"	34.0	22.0	15.0	30.0	98	10
MA311S32	1"	36.0	22.0	15.0	30.0	100	10

3/8"MA331M

Impact Deep Socket

- Metric size
- 3/8" drive Deep Length
- 6 points

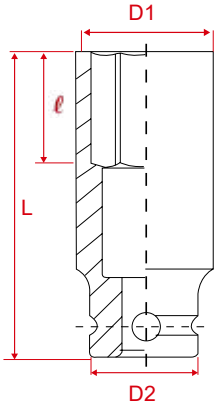

M7 NO.	○	D1	D2	ℓ	L	⚖	📦
	mm	mm	mm	mm	mm	g	
MA331M06	6	10.1	19.0	14	63	73	10
MA331M07	7	11.4	19.0	14	63	73	10
MA331M08	8	12.7	19.0	14	63	73	10
MA331M09	9	14.0	19.0	14	63	75	10
MA331M10	10	15.2	19.0	20	63	76	10
MA331M11	11	17.0	19.0	20	63	81	10
MA331M12	12	18.0	19.0	22	63	78	10
MA331M13	13	19.0	19.0	24	63	86	10
MA331M14	14	20.0	19.0	26	63	93	10
MA331M15	15	22.2	19.0	27	63	102	10
MA331M16	16	23.5	22.0	26	63	115	10
MA331M17	17	25.0	22.0	26	63	127	10
MA331M18	18	26.0	22.0	26	63	137	10
MA331M19	19	27.0	22.0	26	63	143	10
MA331M20	20	28.0	22.0	26	63	143	10
MA331M21	21	30.0	22.0	26	63	194	10
MA331M22	22	32.0	22.0	26	63	206	10
MA331M23	23	33.0	22.0	26	63	206	10

3/8"MA331S

Impact Deep Socket

- Inch size
- 3/8" drive Deep Length
- 6 points

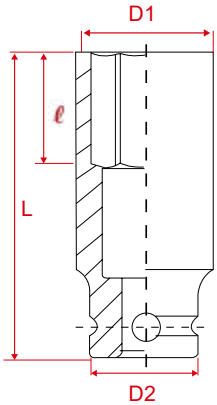

M7 NO.	○	D1	D2	ℓ	L	⚖	📦
	inch	mm	mm	mm	mm	g	
MA331S08	1/4"	10.5	19.0	4.0	28.5	35	---
MA331S10	5/16"	12.6	19.0	14	63	73	10
MA331S12	3/8"	14.6	19.0	20	63	76	10
MA331S14	7/16"	17.1	19.0	20	63	81	10
MA331S16	1/2"	19.0	19.0	24	63	83	10
MA331S18	9/16"	20.0	19.0	26	63	87	10
MA331S20	5/8"	23.5	22.0	26	63	111	10
MA331S22	11/16"	25.0	22.0	26	63	125	10
MA331S24	3/4"	27.0	22.0	26	63	142	10
MA331S26	13/16"	30.0	22.0	26	63	178	10
MA331S28	7/8"	32.0	22.0	26	63	188	10
MA331S30	15/16"	34.0	22.0	26	63	232	10
MA331S32	1"	36.0	22.0	26	63	249	10

MA401M

1/2"Duive Stubby Metric Size impact Socket

- Metric size

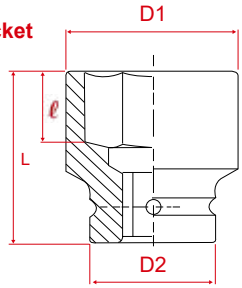

M7 NO.	○	D1	D2	ℓ	L	⚖	📦
	mm	mm	mm	mm	mm	g	
MA401M09	09	18	25	5	28	48	6/40
MA401M10	10	18	25	5	28	50	6/40
MA401M11	11	18	25	5	28	50	6/40
MA401M12	12	19	25	5	28	50	6/40
MA401M13	13	20	25	5	28	52	6/40
MA401M14	14	22	25	5	28	53	6/40
MA401M15	15	23	25	5	28	55	6/40
MA401M16	16	25	25	8	28	62	6/40
MA401M17	17	26	26	8	28	67	6/40
MA401M18	18	28	28	8	28	82	6/40
MA401M19	19	28	28	9	28	80	6/40
MA401M20	20	30	30	9	28	90	6/40
MA401M21	21	30	30	9	28	86	6/40
MA401M22	22	32	30	9	28	94	6/40
MA401M23	23	34	30	9	28	102	6/40
MA401M24	24	34	30	9	28	98	6/40

MA401S

1/2"Duive Stubby Inch Size impact Socket

- Inch size

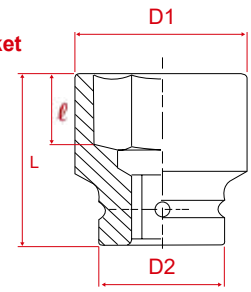

M7 NO.	○	D1	D2	ℓ	L	⚖	📦
	inch	mm	mm	mm	mm	g	
MA401S10	5/16"	14.5	25	5	28	46	6/40
MA401S12	3/8"	16	25	5	28	47	6/40
MA401S14	7/16"	18	25	5	28	50	6/40
MA401S16	1/2"	20	25	5	28	51	6/40
MA401S18	9/16"	22	25	5	28	54	6/40
MA401S20	5/8"	25	25	8	28	61	6/40
MA401S26	13/16"	30	30	9	28	88	6/40
MA401S28	7/8"	32	30	9	28	95	6/40
MA401S30	15/16"	34	30	9	28	98	6/40

IMPACT SOCKET

1/2"MA411M

Impact Standard Socket

- 1/2" drive standard Length
- 6 points
- Metric size

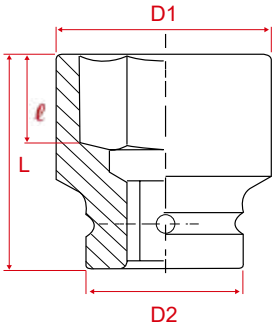

M7 NO.	⬡	D1	D2	ℓ	L	⚖	📦
	mm	mm	mm	mm	mm	g	
MA411M08	8	14.5	24.9	9	38	80	10
MA411M09	9	15.6	24.9	10	38	80	10
MA411M10	10	16.7	24.9	10	38	71	10
MA411M11	11	18.0	24.9	10	38	72	10
MA411M12	12	19.0	24.9	11	38	72	10
MA411M13	13	20.2	24.9	11	38	74	10
MA411M14	14	21.5	24.9	11	38	77	10
MA411M15	15	23.0	24.9	12	38	78	10
MA411M16	16	24.9	24.9	12	38	82	10
MA411M17	17	25.9	25.0	13	38	84	10
MA411M18	18	26.9	25.0	13	38	88	10
MA411M19	19	29.9	25.0	13	38	88	10
MA411M20	20	29.9	25.0	13	38	90	10
MA411M21	21	32.0	30.0	14.5	38	93	10
MA411M22	22	32.0	30.0	14.5	38	134	10
MA411M23	23	34.0	30.0	16	42	138	10
MA411M24	24	36.0	30.0	17	42	138	10
MA411M25	25	36.0	30.0	17	42	150	10
MA411M26	26	38.0	30.0	17	42	158	10
MA411M27	27	40.0	30.0	19	46	159	10
MA411M28	28	38.0	40.0	16	46	270	10
MA411M29	29	38.0	40.0	16	46	270	10
MA411M30	30	41.9	30.0	19	46	222	10
MA411M31	31	43.9	30.0	20.5	46	244	10
MA411M32	32	43.9	30.0	20.5	46	238	10
MA411M33	33	45.9	35.0	22	46	290	10
MA411M34	34	45.9	35.0	22	46	330	10
MA411M35	35	49.9	35.0	22	50	357	10
MA411M36	36	49.9	35.0	22	50	376	10
MA411M37	37	50.9	35.0	25	50	380	10
MA411M38	38	51.9	35.0	25	50	390	10

1/2"MA411S

Impact Standard Socket

- 1/2" drive standard Length
- 6 points
- Inch size

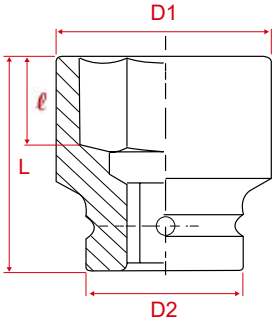

M7 NO.	⬡	D1	D2	ℓ	L	⚖	📦
	inch	mm	mm	mm	mm	g	
MA411S08	1/4"	12.5	24.9	8	38	70	10
MA411S10	5/16"	14.5	24.9	8	38	70	10
MA411S12	3/8"	16.0	24.9	8	38	70	10
MA411S14	7/16"	18.0	24.9	9	38	72	10
MA411S16	1/2"	20.0	24.9	11	38	74	10
MA411S18	9/16"	22.0	24.9	11	38	76	10
MA411S20	5/8"	24.9	24.9	12	38	81	10
MA411S22	11/16"	26.0	25.0	12	38	83	10
MA411S24	3/4"	28.0	25.0	12	38	85	10
MA411S26	13/16"	30.0	25.0	13	38	94	10
MA411S28	7/8"	32.0	30.0	13	38	134	10
MA411S30	15/16"	34.0	30.0	15	38	135	10
MA411S32	1"	36.0	30.0	15	38	144	10
MA411S34	1-1/16"	38.0	30.0	17	40	203	10
MA411S36	1-1/8"	40.0	30.0	18.5	40	260	10
MA411S38	1-3/16"	42.0	30.0	18.5	40	280	10
MA411S40	1-1/4"	44.0	30.0	18.5	40	290	10
MA411S42	1-5/16"	46.0	35.0	21	43	301	10
MA411S44	1-3/8"	48.0	35.0	21	43	338	10
MA411S46	1-7/16"	50.0	44.0	21	43	357	10
MA411S48	1-1/2"	52.0	44.0	23.5	43	376	10

1/2"MA431M

IMPACT DEEP SOCKET

- 1/2" drive Deep Length
- Metric size
- 6 points

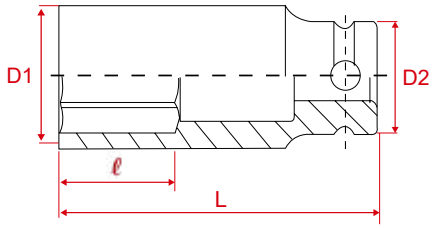

M7 NO.	○	D1	D2	ℓ	L	⚖	📦
	mm	mm	mm	mm	mm	g	
MA431M06	6	12.0	24.9	10	82	168	10
MA431M07	7	13.0	24.9	10	82	168	10
MA431M08	8	14.5	24.9	13	82	168	10
MA431M09	9	15.6	24.9	15	82	168	10
MA431M10	10	16.7	24.9	15	82	168	10
MA431M11	11	18.0	24.9	15	82	169	10
MA431M12	12	19.0	24.9	15	82	170	10
MA431M13	13	20.2	24.9	15	82	176	10
MA431M14	14	21.5	24.9	18	82	180	10
MA431M15	15	23.0	25.0	18	82	184	10
MA431M16	16	24.9	25.0	18	82	190	10
MA431M17	17	25.9	25.0	19	82	196	10
MA431M18	18	26.9	25.0	19	82	214	10
MA431M19	19	29.9	30.0	19	82	216	10
MA431M20	20	29.9	30.0	26	82	220	10
MA431M21	21	31.9	30.0	26	82	222	10
MA431M22	22	31.9	30.0	26	82	288	10
MA431M23	23	33.9	30.0	26	82	338	10
MA431M24	24	35.9	30.0	26	82	377	10
MA431M25	25	35.9	30.0	26	82	369	10
MA431M26	26	37.9	30.0	26	82	321	10
MA431M27	27	39.9	30.0	26	82	454	10
MA431M28	28	39.9	30.0	26	82	442	10
MA431M29	29	41.9	30.0	26	82	451	10
MA431M30	30	41.9	30.0	26	82	431	10
MA431M31	31	43.9	35.0	26	90	480	10
MA431M32	32	43.9	35.0	26	90	497	10
MA431M33	33	45.9	35.0	38	90	590	10
MA431M34	34	45.9	35.0	38	90	554	10
MA431M35	35	49.9	40.0	38	93	690	10
MA431M36	36	49.9	40.0	38	93	670	10

1/2"MA431S

IMPACT DEEP SOCKET

- 1/2" drive Deep Length
- Inch size
- 6 points

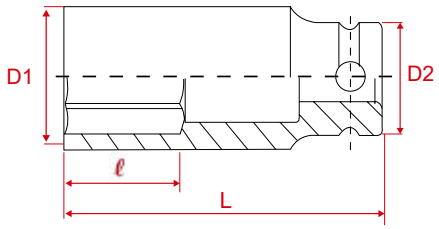

M7 NO.	○	D1	D2	ℓ	L	⚖	📦
	inch	mm	mm	mm	mm	g	
MA431S08	1/4"	12.5	24.9	10	82	160	10
MA431S10	5/16"	14.5	24.9	13	82	160	10
MA431S12	3/8"	16.0	24.9	15	82	167	10
MA431S14	7/16"	18.0	24.9	15	82	171	10
MA431S16	1/2"	20.0	24.9	15	82	176	10
MA431S18	9/16"	22.0	24.9	17	82	181	10
MA431S20	5/8"	24.9	24.9	18	82	187	10
MA431S22	11/16"	25.9	25.0	18	82	194	10
MA431S24	3/4"	27.9	25.0	18	82	217	10
MA431S26	13/16"	29.9	25.0	26	82	227	10
MA431S28	7/8"	31.9	30.0	26	82	290	10
MA431S30	15/16"	33.9	30.0	26	82	319	10
MA431S32	1"	35.9	30.0	26	82	346	10
MA431S34	1-1/16"	37.9	30.0	26	82	450	10
MA431S36	1-1/8"	39.9	30.0	26	82	450	10
MA431S38	1-3/16"	41.9	30.0	26	82	480	10
MA431S40	1-1/4"	43.9	30.0	26	82	500	10
MA431S42	1-5/16"	45.9	35.0	34	90	565	10
MA431S44	1-3/8"	47.9	35.0	34	90	595	10
MA431S46	1-7/16"	49.9	44.0	34	90	699	10
MA431S48	1-1/2"	51.8	44.0	34	90	744	10

3/4"MA611S

Impact Standard Socket

- 3/4" drive standard Length
- 6 points
- Inch size

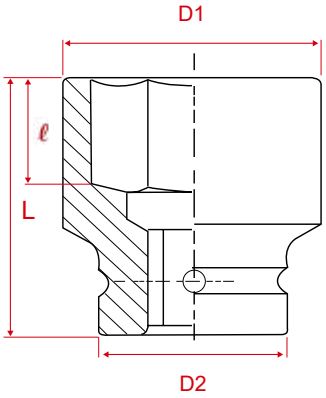

M7 NO.	⬡	D1	D2	ℓ	L	⚖	📦
	inch	mm	mm	mm	mm	g	
MA611S16	1/2"	22	38	6.3	50	380	1
MA611S18	9/16"	25.5	38	6.3	50	380	1
MA611S20	5/8"	27.5	38	7.1	50	380	1
MA611S22	11/16"	29	38	8.1	50	390	1
MA611S24	3/4"	30.2	38	9	52	390	1
MA611S26	13/16"	32	38	10.6	52	400	1
MA611S28	7/8"	34	38	12.2	52	440	1
MA611S30	15/16"	36	38	12.4	52	440	1
MA611S32	1"	38	38	12.4	52	450	1
MA611S34	1-1/16"	40	40	12.4	52	510	1
MA611S36	1-1/8"	42	42	16.1	52	570	1
MA611S38	1-3/16"	44	44	16.1	52	610	1
MA611S40	1-1/4"	46	44	16.1	52	630	1
MA611S42	1-5/16"	50	44	18.8	56	660	1
MA611S44	1-3/8"	52	44	18.8	56	770	1
MA611S46	1-7/16"	54	44	18.8	56	770	1
MA611S48	1-1/2"	56	44	21.5	56	830	1
MA611S50	1-9/16"	58	44	21.5	58	860	1
MA611S52	1-5/8"	60	44	21.5	58	870	1
MA611S54	1-11/16"	63.5	44	24.6	62	1050	1
MA611S56	1-3/4"	65	44	24.9	62	1090	1
MA611S58	1-13/16"	67	44	25.1	63	1150	1
MA611S60	1-7/8"	68	44	27	68	1200	1
MA611S62	1-15/16"	70	44	27	70	1250	1
MA611S64	2"	71	44	27	72	1310	1
MA611S66	2-1/16"	74	54	29.2	72	1380	1
MA611S68	2-1/8"	77	54	30.3	72	1650	1
MA611S70	2-3/16"	77	54	30.3	74	1700	1
MA611S72	2-1/4"	80	54	32.4	74	1720	1
MA611S74	2-5/16"	82	54	32.8	75	1810	1
MA611S76	2-3/8"	84	54	33.1	80	2050	1
MA611S78	2-7/16"	85	54	34.4	80	2080	1
MA611S80	2-1/2"	86	54	34.4	80	2250	1
MA611S82	2-9/16"	88	54	35.1	80	2300	1
MA611S84	2-5/8"	88	54	35.1	80	2300	1
MA611S86	2-11/16"	88	54	36.4	80	2300	1
MA611S88	2-3/4"	96	54	37.8	85	2450	1
MA611S90	2-13/16"	96	60	38.1	88	2550	1
MA611S92	2-7/8"	98	60	39.4	90	2600	1
MA611S94	2-15/16"	100	60	46	92	2700	1
MA611S96	3"	100	60	46	92	2800	1

3/4"MA611M

Impact Standard Socket

- 3/4" drive standard Length
- 6 points
- Metric size

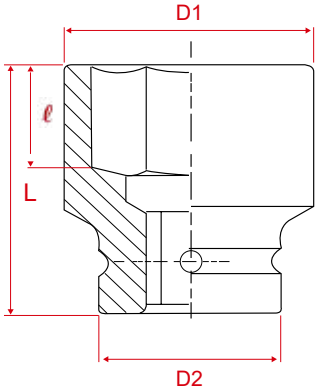

M7 NO.	⬡	D1	D2	ℓ	L	⚖	📦
	mm	mm	mm	mm	mm	g	
MA611M13	13	22	38	7	50	210	1
MA611M14	14	25.5	38	7	50	210	1
MA611M15	15	26	38	7	50	220	1
MA611M16	16	27.5	38	7	50	220	1
MA611M17	17	28.5	38	9.6	50	230	1
MA611M18	18	29.5	38	10.2	52	230	1
MA611M19	19	30	38	11.1	52	230	1
MA611M20	20	31	38	11.5	52	240	1
MA611M21	21	32	38	11.7	52	240	1
MA611M22	22	34	38	12.5	52	250	1
MA611M23	23	35	38	12.7	52	250	1
MA611M24	24	36	38	14	52	250	1
MA611M25	25	38	38	14	52	270	1
MA611M26	26	38	38	14.6	52	270	1
MA611M27	27	40	40	15.8	52	280	1
MA611M28	28	42	42	16.3	52	320	1
MA611M29	29	42	42	16.7	52	320	1
MA611M30	30	46	44	16.7	52	370	1
MA611M31	31	46	44	16.7	52	370	1
MA611M32	32	48	44	18.3	52	380	1
MA611M33	33	50	44	19.1	56	410	1
MA611M34	34	51	44	20	56	410	1
MA611M35	35	52	44	20.1	56	470	1
MA611M36	36	53.5	44	21.5	56	470	1
MA611M37	37	54	44	21.5	56	470	1
MA611M38	38	56	44	22.3	56	470	1
MA611M39	39	56	44	22.3	58	480	1
MA611M40	40	58	44	22.8	58	540	1
MA611M41	41	60	44	23	58	590	1
MA611M42	42	61	44	23	58	660	1
MA611M43	43	63	44	23	62	700	1
MA611M44	44	65	44	23	62	720	1
MA611M45	45	66	44	23	63	740	1
MA611M46	46	67	44	23	63	770	1
MA611M47	47	68	44	27	68	820	1
MA611M48	48	69	44	27	68	830	1
MA611M49	49	70	44	29	70	830	1
MA611M50	50	71	54	29.8	72	970	1
MA611M51	51	71	54	29.8	72	1150	1
MA611M52	52	74	54	29.8	72	1250	1
MA611M54	54	77	54	29.8	72	1250	1
MA611M55	55	77	54	29.8	74	1250	1
MA611M56	56	77	54	31	74	1450	1
MA611M57	57	80	54	31	74	1550	1
MA611M58	58	82	54	31	74	1580	1
MA611M59	59	82	54	33	75	1600	1
MA611M60	60	84	54	33	80	1620	1
MA611M62	62	85	54	33	80	1650	1
MA611M63	63	86	54	33	80	1720	1
MA611M65	65	88	54	33	80	1790	1
MA611M67	67	90	54	35	80	1850	1
MA611M70	70	96	54	35	85	1920	1

3/4"MA631S

Impact Deep Socket

- Inch size
- 3/4" drive Deep Length
- 6 points

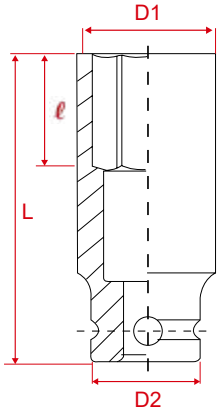

M7 NO.		D1	D2	ℓ	L		
	inch	mm	mm	mm	mm	g	
MA631S16	1/2"	22	38	12	90	380	1
MA631S18	9/16"	25.5	38	12	90	380	1
MA631S20	5/8"	27.5	38	12	90	380	1
MA631S22	11/16"	29	38	12	90	380	1
MA631S24	3/4"	30	38	12	90	390	1
MA631S26	13/16"	32	38	12	90	390	1
MA631S28	7/8"	34	38	19	90	400	1
MA631S30	15/16"	36	38	19	90	440	1
MA631S32	1"	38	38	19	90	440	1
MA631S34	1-1/16"	40	40	19	90	450	1
MA631S36	1-1/8"	42	42	19	90	510	1
MA631S38	1-3/16"	44	44	19	90	570	1
MA631S40	1-1/4"	46	44	19	90	610	1
MA631S42	1-5/16"	50	44	19	90	630	1
MA631S44	1-3/8"	52	44	19	90	660	1
MA631S46	1-7/16"	54	44	19	90	770	1
MA631S48	1-1/2"	56	44	22	92	770	1
MA631S50	1-9/16"	58	44	40	92	830	1
MA631S52	1-5/8"	60	44	40	92	860	1
MA631S54	1-11/16"	63.5	44	40	92	870	1
MA631S56	1-3/4"	65	44	40	92	1050	1
MA631S58	1-13/16"	67	44	40	92	1090	1
MA631S60	1-7/8"	68	44	40	92	1150	1
MA631S62	1-15/16"	70	44	40	92	1200	1
MA631S64	2"	71	54	40	95	1250	1
MA631S66	2-1/16"	74	54	40	95	1310	1
MA631S68	2-1/8"	77	54	40	100	1380	1
MA631S70	2-3/16"	77	54	40	100	1650	1
MA631S72	2-1/4"	80	54	40	100	1700	1
MA631S74	2-5/16"	82	54	40	105	1720	1
MA631S76	2-3/8"	84	54	40	105	1810	1
MA631S78	2-7/16"	85	54	40	105	2050	1
MA631S80	2-1/2"	86	54	40	105	2080	1
MA631S82	2-9/16"	88	54	40	105	2250	1
MA631S84	2-5/8"	90	54	40	105	2300	1
MA631S86	2-11/16"	92	54	40	105	2350	1
MA631S88	2-3/4"	96	54	40	105	2400	1
MA631S90	2-13/16"	98	54	40	105	2450	1
MA631S92	2-7/8"	100	54	40	105	2650	1
MA631S94	2-15/16"	102	54	40	105	2850	1
MA631S96	3"	104	54	40	105	3050	1

3/4"MA631M

Impact Deep Socket

- 3/4" drive Deep Length
- 6 points
- Metric size

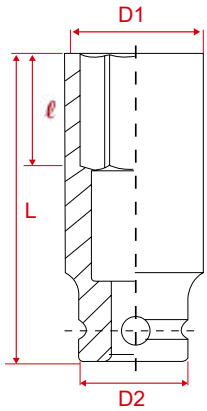

M7 NO.	○	D1	D2	ℓ	L	⚖	📦
	mm	mm	mm	mm	mm	g	
MA631M13	13	22	38	12	90	380	1
MA631M14	14	25.5	38	12	90	380	1
MA631M15	15	26	38	12	90	380	1
MA631M16	16	27.5	38	12	90	380	1
MA631M17	17	28.5	38	12	90	390	1
MA631M18	18	29.5	38	12	90	390	1
MA631M19	19	30	38	12	90	390	1
MA631M20	20	31	38	19	90	390	1
MA631M21	21	32	38	19	90	400	1
MA631M22	22	34	38	19	90	430	1
MA631M23	23	35	38	19	90	430	1
MA631M24	24	36	38	19	90	440	1
MA631M25	25	38	38	19	90	460	1
MA631M26	26	40	40	19	90	460	1
MA631M27	27	40	40	19	90	500	1
MA631M28	28	42	42	19	90	550	1
MA631M29	29	42	42	19	90	560	1
MA631M30	30	46	44	19	92	620	1
MA631M31	31	47	44	19	92	620	1
MA631M32	32	48	44	19	92	630	1
MA631M33	33	50	44	19	92	670	1
MA631M34	34	51	44	19	92	670	1
MA631M35	35	52	44	19	92	770	1
MA631M36	36	53.5	44	19	92	790	1
MA631M37	37	54	44	19	92	800	1
MA631M38	38	56	44	19	95	830	1
MA631M39	39	56	44	40	95	850	1
MA631M40	40	58	44	40	100	880	1
MA631M41	41	60	44	40	100	880	1
MA631M42	42	61	44	40	100	1050	1
MA631M43	43	63	44	40	105	1050	1
MA631M44	44	64	44	40	105	1060	1
MA631M45	45	66	44	40	105	1100	1
MA631M46	46	67	44	40	105	1150	1
MA631M47	47	68	44	40	105	1160	1
MA631M48	48	69	44	40	105	1200	1
MA631M49	49	70	44	40	105	1240	1
MA631M50	50	71	54	40	105	1320	1
MA631M51	51	72	54	40	105	1420	1
MA631M52	52	54	74	40	105	1530	1
MA631M54	54	76	54	40	105	1650	1
MA631M55	55	77	54	40	105	1670	1
MA631M56	56	78	54	40	105	1720	1
MA631M57	57	80	54	40	105	1820	1
MA631M58	58	82	54	40	105	1920	1
MA631M59	59	82	54	40	105	1920	1
MA631M60	60	84	54	40	105	2020	1
MA631M62	62	85	54	40	105	2080	1
MA631M65	65	88	54	40	105	2300	1
MA631M67	67	92	54	40	105	2350	1
MA631M70	70	96	54	40	105	2450	1

1"MA811S

Impact Standard Socket

- 1" drive standard Length
- 6 points
- Inch size

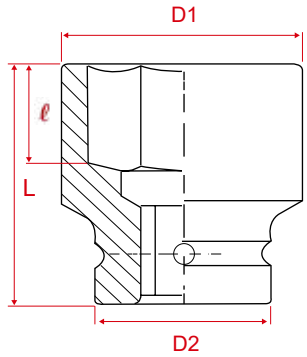

M7 NO.	⬡	D1	D2	ℓ	L	⚖	📦
	inch	mm	mm	mm	mm	g	
MA811S20	5/8"	32	51	8	58	470	1
MA811S22	11/16"	34	51	8.1	58	480	1
MA811S24	3/4"	36	51	9.5	58	500	1
MA811S26	13/16"	38	51	11	58	510	1
MA811S28	7/8"	39	51	12.5	58	510	1
MA811S30	15/16"	40	51	12.5	58	510	1
MA811S32	1"	42	51	12.5	58	520	1
MA811S34	1-1/16"	44	51	12.5	58	520	1
MA811S36	1-1/8"	46	51	12.5	58	530	1
MA811S38	1-3/16"	48	51	16.5	60	550	1
MA811S40	1-1/4"	51	51	16.5	60	610	1
MA811S42	1-5/16"	52	52	19	62	620	1
MA811S44	1-3/8"	54	54	19	62	630	1
MA811S46	1-7/16"	56	54	19	62	640	1
MA811S48	1-1/2"	58	54	22	62	670	1
MA811S50	1-9/16"	60	54	22	62	870	1
MA811S52	1-5/8"	61.5	54	22	62	920	1
MA811S54	1-11/16"	65	54	25	64	920	1
MA811S56	1-3/4"	66	58	25	64	1000	1
MA811S58	1-13/16"	68	58	25.6	64	1000	1
MA811S60	1-7/8"	70	58	27	66	1080	1
MA811S62	1-15/16"	72	58	27	68	1080	1
MA811S64	2"	74	58	27	70	1100	1
MA811S66	2-1/16"	75	58	30	70	1200	1
MA811S68	2-1/8"	78	58	30	70	1250	1
MA811S70	2-3/16"	80	62	30	72	1450	1
MA811S72	2-1/4"	84	62	32.5	75	1520	1
MA811S74	2-5/16"	86	62	32.5	75	1520	1
MA811S76	2-3/8"	87	62	33.5	78	1720	1
MA811S78	2-7/16"	89	62	34	78	1890	1
MA811S80	2-1/2"	91	62	34	80	1900	1
MA811S82	2-9/16"	93	62	35	80	1900	1
MA811S84	2-5/8"	95	62	37.5	82	2000	1
MA811S86	2-11/16"	97	62	37.5	82	2200	1
MA811S88	2-3/4"	98	62	38	85	2250	1
MA811S90	2-13/16"	100	62	40	87	2380	1
MA811S92	2-7/8"	102	62	40	87	2400	1
MA811S94	2-15/16"	104	86	41	95	3190	1
MA811S96	3"	106	86	43	98	3450	1
MA811S98	3-1/16"	107	86	43.5	100	3550	1
MA811S100	3-1/8"	109	86	43.5	100	3620	1
MA811S104	3-1/4"	113	86	43.5	100	3800	1
MA811S108	3-3/8"	115	86	47.5	100	4050	1
MA811S112	3-1/2"	125	86	49	105	5170	1
MA811S116	3-5/8"	127	86	51	105	5200	1
MA811S120	3-3/4"	130	86	51	105	5250	1
MA811S124	3-7/8"	136	95	55	105	5990	1
MA811S126	3-15/16"	137	95	55	105	6000	1
MA811S128	4"	140	95	56	105	6000	1
MA811S132	4-1/8"	143	95	57.5	105	6500	1
MA811S136	4-1/4"	147	95	58.5	105	7200	1
MA811S144	4-1/2"	152	95	61	105	10000	1

1"MA811M

Impact Standard Socket

- 1" drive standard Length
- 6 points
- Metric size

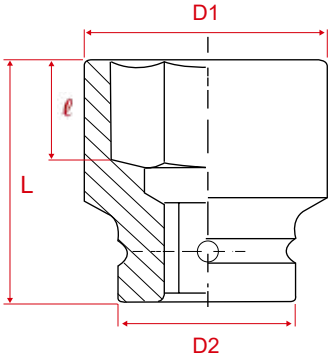

M7 NO.	○	D1	D2	ℓ	L	⚖	📦
	mm	mm	mm	mm	mm	g	
MA811M17	17	34	51	11.5	58	490	1
MA811M18	18	35	51	11.5	58	500	1
MA811M19	19	35	51	11.5	58	500	1
MA811M20	20	37	51	11.5	58	500	1
MA811M21	21	38	51	11.5	58	500	1
MA811M22	22	39	51	12.5	58	510	1
MA811M23	23	40	51	13	58	510	1
MA811M24	24	40.5	51	14	58	510	1
MA811M25	25	41	51	14.5	58	510	1
MA811M26	26	42.5	51	15	58	520	1
MA811M27	27	44	51	16	58	520	1
MA811M28	28	45	51	16	58	530	1
MA811M29	29	46	51	16.5	60	530	1
MA811M30	30	48	51	17	60	530	1
MA811M32	32	51	51	18.5	62	590	1
MA811M33	33	52	52	19.5	62	620	1
MA811M34	34	54	54	19.5	62	640	1
MA811M35	35	54	54	20.5	62	650	1
MA811M36	36	56	54	21.5	62	670	1
MA811M37	37	57	54	22	62	670	1
MA811M38	38	58	54	22.5	62	680	1
MA811M39	39	58.7	54	23	62	770	1
MA811M40	40	60	54	23	62	870	1
MA811M41	41	61.5	54	23	62	920	1
MA811M42	42	63	54	23	64	980	1
MA811M43	43	65	54	23	64	1000	1
MA811M44	44	65	54	23	64	1000	1
MA811M45	45	66	54	23	64	1000	1
MA811M46	46	68	54	23	64	1000	1
MA811M47	47	69	54	24	66	1000	1
MA811M48	48	70	54	27	66	1050	1
MA811M49	49	70	54	27	66	1050	1
MA811M50	50	73	54	27	70	1070	1
MA811M51	51	73	54	27	70	1070	1
MA811M52	52	75	54	27	70	1200	1
MA811M53	53	75	54	27	70	1200	1
MA811M54	54	75	54	28	70	1200	1
MA811M55	55	79	54	28	72	1440	1
MA811M56	56	80	54	32	72	1350	1
MA811M57	57	80	54	32	72	1350	1
MA811M58	58	85	54	32	75	1620	1
MA811M59	59	85	54	36	75	1620	1
MA811M60	60	87	54	36	78	1730	1
MA811M61	61	87	54	36	78	1730	1
MA811M62	62	91	54	36	80	1900	1
MA811M65	65	93	54	36	80	1900	1
MA811M70	70	104	86	40	85	2190	1
MA811M73	73	104	86	40	90	2800	1
MA811M75	75	104	86	40	95	3200	1
MA811M76	76	106	86	43	98	3480	1
MA811M80	80	109	86	47	100	3650	1
MA811M85	85	115	86	47	100	4100	1
MA811M90	90	125	86	47	105	5200	1
MA811M95	95	130	86	50	105	5250	1
MA811M100	100	137	95	55	105	6050	1
MA811M105	105	143	95	55	105	6550	1
MA811M110	110	147	95	55	105	7250	1
MA811M115	115	152	95	55	105	10000	1
MA811M120	120	160	95	60	110	14000	1
MA811M125	125	165	95	63	115	19000	1

1"MA831S

Impact Deep Socket

- 1" drive Deep Length
- 6 points
- Inch size

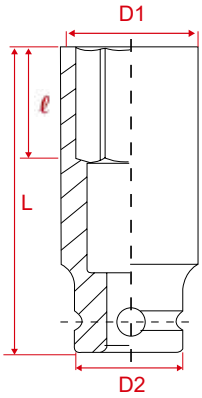

M7 NO.	⬡	D1	D2	ℓ	L	⚖	📦
	inch	mm	mm	mm	mm	g	
MA831S20	5/8"	32	51	9	90	600	1
MA831S22	11/16"	34	51	16	90	620	1
MA831S24	3/4"	36	51	16	90	700	1
MA831S26	13/16"	38	51	16	90	700	1
MA831S28	7/8"	39	51	16	90	710	1
MA831S30	15/16"	40	51	16	90	720	1
MA831S32	1"	42	51	19	90	760	1
MA831S34	1-1/16"	44	51	19	90	800	1
MA831S36	1-1/8"	46	51	19	90	800	1
MA831S38	1-3/16"	48	51	19	90	820	1
MA831S40	1-1/4"	51	51	19	90	910	1
MA831S42	1-5/16"	52	52	23	90	910	1
MA831S44	1-3/8"	54	54	23	90	910	1
MA831S46	1-7/16"	56	54	23	90	950	1
MA831S48	1-1/2"	58	54	23	92	1000	1
MA831S50	1-9/16"	60	54	40	92	1200	1
MA831S52	1-5/8"	61.5	54	40	92	1200	1
MA831S54	1-11/16"	65	54	40	92	1200	1
MA831S56	1-3/4"	66	58	40	92	1350	1
MA831S58	1-13/16"	68	58	40	92	1350	1
MA831S60	1-7/8"	70	58	40	92	1500	1
MA831S62	1-15/16"	72	58	40	92	1560	1
MA831S64	2"	74	58	40	95	1560	1
MA831S66	2-1/16"	75	58	52	95	1600	1
MA831S68	2-1/8"	78	58	52	100	1750	1
MA831S70	2-3/16"	80	62	52	100	2000	1
MA831S72	2-1/4"	84	62	52	100	2200	1
MA831S74	2-5/16"	86	62	52	105	2260	1
MA831S76	2-3/8"	87	62	52	105	2350	1
MA831S78	2-7/16"	89	62	60	110	2500	1
MA831S80	2-1/2"	91	62	60	110	2580	1
MA831S82	2-9/16"	93	62	60	120	3000	1
MA831S84	2-5/8"	95	62	60	120	3220	1
MA831S86	2-11/16"	97	62	60	124	3250	1
MA831S88	2-3/4"	98	62	60	124	3280	1
MA831S90	2-13/16"	100	62	60	128	3700	1
MA831S92	2-7/8"	102	62	60	128	4150	1
MA831S94	2-15/16"	104	86	60	135	4550	1
MA831S96	3"	106	86	60	135	4550	1
MA831S98	3-1/16"	107	86	60	135	4850	1
MA831S100	3-1/8"	109	86	75	135	4850	1
MA831S104	3-1/4"	113	86	75	135	5150	1
MA831S108	3-3/8"	115	86	75	140	5250	1
MA831S112	3-1/2"	125	86	75	140	5750	1
MA831S116	3-5/8"	127	86	75	140	6050	1
MA831S120	3-3/4"	130	86	75	140	6320	1
MA831S124	3-7/8"	136	95	75	140	7400	1
MA831S126	3-15/16"	137	95	75	140	7500	1
MA831S128	4"	140	95	75	155	7500	1
MA831S132	4-1/8"	143	95	75	155	9800	1
MA831S136	4-1/4"	147	95	75	155	10000	1
MA831S144	4-1/2"	152	95	75	155	10000	1

1"MA831M

Impact Deep Socket

- 1" drive Deep Length
- 6 points
- Metric size

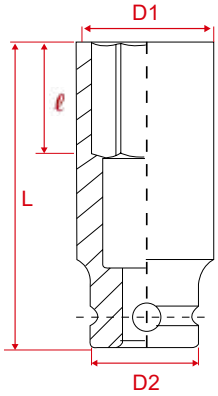

M7 NO.	○	D1	D2	ℓ	L	⚖	📦
	mm	mm	mm	mm	mm	g	
MA831M17	17	34	51	16	90	620	1
MA831M18	18	35	51	16	90	630	1
MA831M19	19	36	51	16	90	700	1
MA831M20	20	37	51	16	90	700	1
MA831M21	21	38	51	16	90	710	1
MA831M22	22	39	51	16	90	710	1
MA831M23	23	40	51	16	90	710	1
MA831M24	24	40.5	51	16	90	720	1
MA831M25	25	41	51	19	90	720	1
MA831M26	26	42.5	51	19	90	750	1
MA831M27	27	44	51	19	90	800	1
MA831M28	28	45	51	19	90	800	1
MA831M29	29	46	51	19	90	800	1
MA831M30	30	48	51	19	90	800	1
MA831M32	32	51	51	19	90	910	1
MA831M33	33	52	52	30	90	910	1
MA831M34	34	54	54	30	90	950	1
MA831M35	35	54	54	30	90	950	1
MA831M36	36	56	54	30	90	950	1
MA831M37	37	57	54	30	90	960	1
MA831M38	38	58	54	30	92	990	1
MA831M39	39	58.7	54	40	92	1060	1
MA831M40	40	60	54	40	92	1200	1
MA831M41	41	61.5	54	40	92	1200	1
MA831M42	42	63	54	40	92	1200	1
MA831M43	43	65	54	40	92	1200	1
MA831M44	44	65	54	40	92	1380	1
MA831M45	45	66	54	40	92	1390	1
MA831M46	46	68	54	40	92	1400	1
MA831M47	47	69	54	40	92	1410	1
MA831M48	48	70	54	40	92	1450	1
MA831M49	49	72	58	40	92	1430	1
MA831M50	50	73	54	40	95	1570	1
MA831M51	51	74	58	40	95	1570	1
MA831M52	52	75	58	52	95	1600	1
MA831M54	54	78	58	52	100	1750	1
MA831M55	55	79	54	52	100	1950	1
MA831M56	56	80	62	52	100	2150	1
MA831M57	57	84	62	52	100	2200	1
MA831M58	58	85	54	52	100	2100	1
MA831M59	59	86	62	52	105	2350	1
MA831M60	60	87	54	52	105	2350	1
MA831M62	62	89	62	60	110	2450	1
MA831M63	63	91	54	60	110	2550	1
MA831M65	65	93	54	60	120	2950	1
MA831M70	70	98	54	60	124	3300	1
MA831M73	73	102	62	60	128	4150	1
MA831M75	75	104	86	60	135	4650	1
MA831M76	76	106	86	60	135	4950	1
MA831M78	78	107	86	60	135	5450	1
MA831M80	80	109	86	75	135	6000	1
MA831M85	85	115	86	75	140	7500	1
MA831M90	90	125	86	75	140	9000	1
MA831M95	95	130	86	75	140	10500	1
MA831M100	100	137	95	75	140	12000	1
MA831M105	105	143	95	75	155	13500	1
MA831M110	110	147	95	75	155	15000	1
MA831M115	115	152	95	75	155	16500	1

1-1/2"MA911S

Impact Standard Socket

- 1-1/2" drive Standard Length
- 6 points
- Inch size

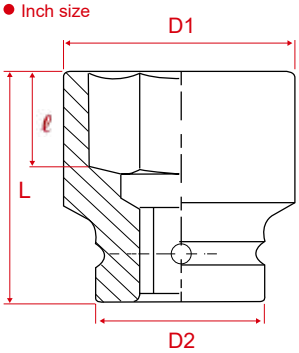

M7 NO.	○	D1	D2	ℓ	L	⚖	📦
	inch	mm	mm	mm	mm	g	
MA911S38	1-3/16"	56	86	16.5	78	2200	1
MA911S40	1-1/4"	58	86	16.5	78	2200	1
MA911S42	1-5/16'	60	86	19	78	2200	1
MA911S44	1-3/8"	62	86	19.5	78	2200	1
MA911S46	1-4/16"	64	86	22.5	78	2000	1
MA911S48	1-1/2"	66	86	24	78	2200	1
MA911S50	1-9/16"	68	86	25.5	78	2200	1
MA911S52	1-5/8"	70	86	27	80	2200	1
MA911S54	1-11/16"	71	86	27	80	2200	1
MA911S56	1-3/4"	75	86	28.5	84	2300	1
MA911S58	1-13/16"	76	86	29	84	2300	1
MA911S60	1-7/8"	78	86	30	84	2300	1
MA911S62	1-15/16"	80	86	31	87	2400	1
MA911S64	2"	82	86	32	87	2400	1
MA911S66	2-1/16"	83	86	33	87	2400	1
MA911S68	2-1/8"	86	86	34.5	90	2500	1
MA911S70	2-3/16"	86	86	35	90	2500	1
MA911S72	2-1/4"	86	86	36	92	2800	1
MA911S74	2-5/16"	92	86	37	92	3100	1
MA911S76	2-3/8"	93	86	38.5	92	3100	1
MA911S78	2-7/16"	96	86	39.5	95	3400	1
MA911S80	2-1/2"	97	86	40.5	95	3400	1
MA911S82	2-9/16"	97	86	41	95	3400	1
MA911S84	2-5/8"	103	86	42.5	100	3600	1
MA911S86	2-11/16"	104	86	43	100	3800	1
MA911S88	2-3/4"	105	86	44.5	100	3800	1
MA911S90	2-13/16"	108	86	45.3	103	4000	1
MA911S92	2-7/8"	108	86	46.5	103	4100	1
MA911S94	2-15/16"	110	86	47	103	4200	1
MA911S96	3"	110	86	48	103	4300	1
MA911S98	3-1/16"	115	86	49.5	110	4400	1
MA911S100	3-1/8"	116	86	51	110	4500	1
MA911S102	3-3/16"	125	86	51	110	4800	1
MA911S104	3-1/4"	125	86	52	110	5500	1
MA911S106	3-5/16"	125	86	53.5	118	5500	1
MA911S108	3-3/8"	125	86	54	118	5500	1
MA911S110	3-7/16"	128	86	55	118	5700	1
MA911S112	3-1/2"	130	86	57.5	118	5800	1
MA911S114	3-9/16"	132	86	57.5	118	6000	1
MA911S116	3-5/8"	134	86	58	118	6200	1
MA911S118	3-11/16"	136	86	59.5	118	6400	1
MA911S120	3-3/4"	137	95	60.5	118	6600	1
MA911S122	3-13/16"	140	95	61.5	125	8600	1
MA911S124	3-7/8"	142	95	63.5	125	8900	1
MA911S126	3-15/16"	144	95	63.5	125	9300	1
MA911S128	4"	145	95	63.5	125	9450	1
MA911S130	4-1/16"	146	95	66	125	9450	1
MA911S132	4-1/8"	150	95	66	125	9500	1
MA911S134	4-3/16"	151	95	67	125	9500	1
MA911S136	4-1/4"	153	95	70	125	10300	1
MA911S138	4-5/16"	156	95	70	125	10700	1
MA911S140	4-3/8"	160	95	70	125	11500	1
MA911S142	4-7/16"	162	95	71.5	125	11800	1
MA911S144	4-1/2"	163	95	72	135	12000	1
MA911S146	4-5/8"	165	95	76.5	135	12600	1
MA911S148	4-3/4"	168	95	76.5	135	13500	1
MA911S150	5"	179	127	77	140	14500	1

1-1/2"MA911M

Impact Standard Socket

- 1-1/2" drive Standard Length
- 6 points
- Metric size

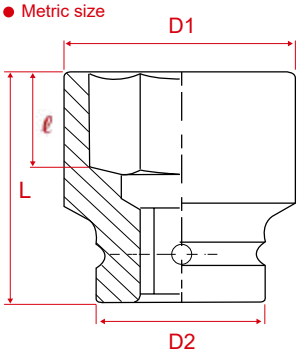

M7 NO.	⬡	D1	D2	ℓ	L	⚖	📦
	mm	mm	mm	mm	mm	g	
MA911M30	30	56	86	17	78	2200	1
MA911M32	32	58	86	19	78	2200	1
MA911M34	34	61	86	20	78	2200	1
MA911M35	35	61	86	20	78	2200	1
MA911M36	36	64	86	22	78	2200	1
MA911M38	38	66	86	23	78	2200	1
MA911M40	40	68	86	23	78	2200	1
MA911M41	41	70	86	25	80	2200	1
MA911M42	42	70	86	25	80	2200	1
MA911M46	46	76	86	29	84	2200	1
MA911M50	50	81	86	30	87	2400	1
MA911M51	51	81	86	30	87	2400	1
MA911M52	52	87	86	30	88	2400	1
MA911M53	53	87	86	30	88	2400	1
MA911M54	54	87	86	30	88	2400	1
MA911M55	55	87	86	34	90	2500	1
MA911M57	57	87	86	34	90	2500	1
MA911M58	58	87	86	34	90	2500	1
MA911M60	60	93	86	35	92	3100	1
MA911M62	62	93	86	35	92	3100	1
MA911M63	63	93	86	35	92	3100	1
MA911M65	65	97	86	35	95	3400	1
MA911M66	66	97	86	35	95	3400	1
MA911M67	67	97	86	35	95	3400	1
MA911M68	68	104	86	35	100	3800	1
MA911M70	70	105	86	35	100	3,800	1
MA911M72	72	105	86	35	100	3800	1
MA911M73	73	108	86	35	103	4100	1
MA911M75	75	110	86	35	103	4200	1
MA911M76	76	110	86	35	103	4300	1
MA911M78	78	115	86	38	110	4400	1
MA911M80	80	116	86	38	110	4650	1
MA911M85	85	125	86	41	118	5500	1
MA911M90	90	130	86	44	118	5800	1
MA911M95	95	137	95	46	118	6600	1
MA911M100	100	144	95	48	125	9300	1
MA911M105	105	150	95	51	125	9500	1
MA911M110	110	156	95	54	125	10500	1
MA911M115	115	160	95	56	135	12100	1
MA911M120	120	168	95	58	135	13200	1
MA911M125	125	175	95	61	135	14000	1
MA911M130	130	180	127	64	145	18000	1
MA911M135	135	186	127	68	150	19000	1
MA911M140	140	192	127	70	150	20000	1
MA911M145	145	198	127	74	150	21000	1
MA911M150	150	203	127	78	150	22000	1
MA911M155	155	209	127	78	150	24500	1
MA911M160	160	222	127	82	175	29800	1
MA911M165	165	228	127	90	175	32000	1
MA911M175	175	235	127	94	175	34500	1

1-1/2"MA931M

Impact Deep Socket

- 1-1/2" drive Deep Length
- 6 points
- Metric size

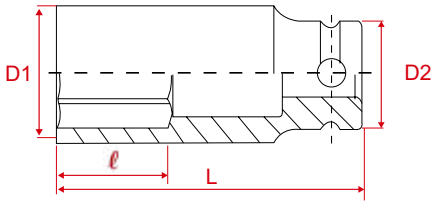

M7 NO.	○	D1	D2	ℓ	L	⚖	📦
	mm	mm	mm	mm	mm	g	
MA931M41	41	70	86	25	115	3200	1
MA931M42	42	73	86	27	115	3200	1
MA931M46	46	76	86	29	115	3200	1
MA931M49	49	80	86	30	115	3200	1
MA931M50	50	81	86	30	135	3200	1
MA931M54	54	86	86	34	140	3900	1
MA931M55	55	87	86	34	140	3900	1
MA931M57	57	86	86	35	150	4300	1
MA931M58	58	93	86	35	150	4600	1
MA931M60	60	96	86	35	150	5150	1
MA931M62	62	97	86	35	150	5150	1
MA931M65	65	105	86	35	150	5700	1
MA931M70	70	108	86	35	160	6700	1
MA931M73	73	110	86	35	170	7800	1
MA931M75	75	110	86	35	170	7800	1
MA931M76	76	115	86	35	170	8200	1
MA931M78	78	116	86	38	170	8200	1
MA931M80	80	125	86	41	170	8600	1
MA931M85	85	130	86	44	170	9900	1
MA931M95	95	137	95	46	180	12200	1
MA931M100	100	144	95	48	190	14100	1
MA931M105	105	150	95	51	190	15800	1
MA931M110	110	156	95	54	200	17000	1
MA931M115	115	160	95	56	200	20400	1
MA931M120	120	168	95	58	210	21500	1
MA931M125	125	168	95	80	210	13200	1

1-1/2"MA931S

Impact Deep Socket

- 1-1/2" drive Deep Length
- 6 points
- Inch size

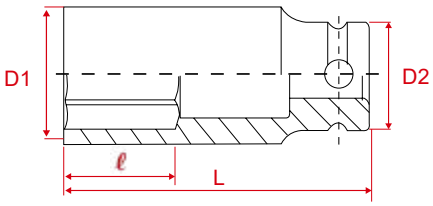

M7 NO.	○	D1	D2	ℓ	L	⚖	📦
	inch	mm	mm	mm	mm	g	
MA931S48	1-1/2"	68	86	27	115	3200	1
MA931S52	1-5/8"	70	86	27	115	3200	1
MA931S54	1-11/16"	73	86	27	115	3200	1
MA931S56	1-3/4"	75	86	28.5	115	3200	1
MA931S58	1-13/16"	76	86	29	115	3200	1
MA931S60	1-7/8"	78	86	30	115	3200	1
MA931S62	1-15/16"	80	86	31	115	3600	1
MA931S64	2"	82	86	32	135	3800	1
MA931S66	2-1/16"	83	86	33	140	3900	1
MA931S68	2-1/8"	86	86	35	140	3900	1
MA931S70	2-3/16"	86	86	35	140	3900	1
MA931S72	2-1/4"	86	86	36	150	4700	1
MA931S74	2-5/16"	92	86	37	150	4700	1
MA931S76	2-3/8"	93	86	38.5	150	5200	1
MA931S78	2-7/16"	96	86	39.5	150	5200	1
MA931S80	2-1/2"	97	86	40.5	150	5200	1
MA931S82	2-9/16"	97	86	41	150	5700	1
MA931S84	2-5/8"	103	86	42.5	150	5700	1
MA931S86	2-11/16"	104	86	43	150	6300	1
MA931S88	2-3/4"	105	86	45	160	6700	1
MA931S90	2-13/16"	108	86	45.5	160	6700	1
MA931S92	2-7/8"	108	86	46.5	160	73200	1
MA931S94	2-15/16"	110	86	47	170	7800	1
MA931S96	3"	110	86	48	170	8500	1
MA931S98	3-1/16"	115	86	49.5	170	8500	1
MA931S100	3-1/8"	116	86	51	170	8500	1
MA931S102	3-3/16"	125	86	51	170	9900	1
MA931S104	3-1/4"	125	86	52	170	9900	1
MA931S106	3-5/16"	125	86	53.5	170	9900	1
MA931S108	3-3/8"	125	86	54	170	9900	1
MA931S110	3-7/16"	128	86	55	170	10300	1
MA931S112	3-1/2"	130	86	57.5	170	10700	1
MA931S114	3-9/16"	132	86	57.5	170	10700	1
MA931S116	3-5/8"	134	86	58	170	11000	1
MA931S118	3-11/16"	136	86	59.5	170	11200	1
MA931S120	3-3/4"	137	95	60.5	180	12200	1
MA931S122	3-13/16"	140	95	61.5	180	12500	1
MA931S124	3-7/8"	142	95	63.5	180	13100	1
MA931S126	3-15/16"	144	95	63.5	190	14100	1
MA931S128	4"	145	95	63.5	190	14900	1
MA931S130	4-1/16"	146	95	66	190	15200	1
MA931S132	4-1/8"	150	95	66	190	15800	1
MA931S134	4-3/16"	151	95	67	190	16500	1
MA931S136	4-1/4"	153	95	70	190	16800	1
MA931S138	4-5/16"	156	95	70	200	17000	1

1-1/2"MA931S

Impact Deep Socket

- 1-1/2" drive Deep Length
- 6 points
- Inch size

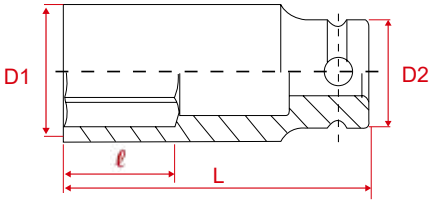

M7 NO.	○	D1	D2	ℓ	L	⚖	📦
	inch	mm	mm	mm	mm	g	
MA931S140	4-3/8"	160	95	70	200	18200	1
MA931S142	4-7/16"	162	95	71.5	200	19100	1
MA931S144	4-1/2"	163	95	72	210	20100	1
MA931S148	4-5/8"	165	95	76.5	210	20900	1
MA931S152	4-3/4"	168	95	76.5	210	21500	1

1/4"ME221

1/4" Drive Extension Bar

M7 NO.	Total Length		⚖	📦
	inch	mm	g	
ME221-02	2"	50	26	10
ME221-04	4"	100	46	10
ME221-06	6"	150	67	10

3/8"ME321

3/8" Drive Extension Bar

M7 NO.	Total Length		⚖	📦
	inch	mm	g	
ME321-03	3"	75	79	10
ME321-05	5"	125	124	10
ME321-06	6"	150	140	10
ME321-10	10"	250	242	10
ME321-12	12"	300	288	10
ME321-15	15"	375	354	10

1/2"ME421

1/2" Drive Extension Bar

Without ball : ME421-05H, MEN421-10H

M7 NO.	Total Length		⚖	📦
	inch	mm	g	
ME421-03	3"	75	142	10
ME421-05	5"	125	228	10
ME421-05H	5"	125	228	10
ME421-10	10"	250	653	10
ME421-10H	10"	250	653	10
ME421-15	15"	375	1041	10

3/4" ME621

3/4" Drive Extension Bar

Without ball :
ME621-04H, ME621-06H, ME621-07H, ME621-10H, ME621-13H

M7 NO.	Total Length		⚖	📦
	inch	mm	g	
ME621-04	4"	100	609	10
ME621-04H	4"	100	609	10
ME621-06	6"	150	813	10
ME621-06H	6"	150	813	10
ME621-07	7"	175	911	10
ME621-07H	7"	175	911	10
ME621-08	8"	200	929	10
ME621-10	10"	250	1200	10
ME621-10H	10"	250	1200	10
ME621-13	13"	330	1480	10
ME621-13H	13"	330	1480	10

1"ME821

1" Drive Extension Bar

Without ball :
ME821-07H, ME821-10H, ME821-13H

M7 NO.	Total Length		⚖	📦
	inch	mm	g	
ME821-03	3"	75	727	10
ME821-06	6"	150	1330	10
ME821-07	7"	175	1520	10
ME821-07H	7"	175	1520	10
ME821-08	8"	200	1705	10
ME821-10	10"	250	2050	10
ME821-10H	10"	250	2050	10
ME821-12	12"	300	2382	10
ME821-13	13"	330	2550	10
ME821-13H	13"	330	2550	10

ME422

1/2" Drive Torque Extension Bar

M7 NO.	Color	Total Length	D	Torque	⚖	📦
		mm	mm	Ft / Nm	g	
ME422-090	Yellow	194	9	65/90	236	10
ME422-110	Blue	194	11	80/110	231	10
ME422-122	Gray	194	12.2	100/135	258	10
ME422-137	White	194	13.7	120/160	300	10
ME422-151	Sky nature	194	15.1	140/190	306	10
ME422-103	Black	194	10.3	75/100	224	10
ME422-114	Beige	194	11.4	90/120	242	10
ME422-128	Orange	194	12.8	110/150	269	10

IMPACT SOCKET

1/2"ME471S

1/2" Drive SAE Impact Hex Driver

M7 NO.		Total Length		
	inch	mm	g	
ME471S08	1/4"	78	69	10
ME471S10	5/16"	78	94	10
ME471S12	3/8"	78	105	10
ME471S14	7/16"	78	119	10
ME471S16	1/2"	78	134	10
ME471S18	9/16"	78	151	10
ME471S20	5/8"	78	173	10
ME471S22	11/16"	78	194	10
ME471S24	3/4"	78	215	10
ME471S26	13/16"	78	229	10

1/2"ME471M

1/2" Impact Hex Bit

M7 NO.		Total Length		
	mm	mm	g	
ME471MO4	4	78	71	10
ME471MO5	5	78	77	10
ME471MO6	6	78	81	10
ME471MO7	7	78	87	10
ME471MO8	8	78	95	10
ME471MO9	9	78	102	10
ME471M10	10	78	108	10
ME471M11	11	78	118	10
ME471M12	12	78	128	10
ME471M13	13	78	140	10
ME471M14	14	78	149	10
ME471M15	15	78	166	10
ME471M16	16	78	177	10
ME471M17	17	78	188	10
ME471M18	18	78	202	10
ME471M19	19	78	215	10
ME471M21	21	78	233	10

3/4"ME671S

3/4" Drive Impact Hex Bits Socket

M7 NO.	Size	Total Length		
	inch	mm	g	
ME671S12	3/8"	100	480	----
ME671S14	7/16"	100	500	----
ME671S16	1/2"	100	510	----
ME671S18	9/16"	100	520	----
ME671S20	5/8"	100	530	----
ME671S22	11/16"	100	540	----
ME671S24	3/4"	100	600	----
ME671S26	13/16"	100	610	----
ME671S28	7/8"	100	620	----
ME671S30	15/16"	100	690	----
ME671S32	1"	100	680	----
ME671S34	1-1/16"	100	720	----
ME671S36	1-1/8"	100	740	----
ME671S38	1-3/16"	100	830	----
ME671S40	1-1/4"	100	850	----

3/4"ME671M

3/4" Drive Impact Hex Bits Socket

M7 NO.	Size	Total Length		
	mm	mm	g	
ME671M10	10	100	490	----
ME671M12	12	100	510	----
ME671M14	14	100	520	----
ME671M17	17	100	540	----
ME671M19	19	100	600	----
ME671M21	21	100	610	----
ME671M22	22	100	620	----
ME671M24	24	100	690	----
ME671M27	27	100	720	----
ME671M30	30	100	830	----
ME671M32	32	100	850	----

Male Adapter

M7 NO.	Spec	D	L		
	inch	mm	mm	g	
ME382	3/8"F x 1/4"M	22	32	12	10
ME384	3/8"F x 1/2"M	22	32	50	10
ME483	1/2"F x 3/8"M	25	38	65	10
ME486	1/2"F x 3/4"M	30	48	161	10
ME486H	1/2"F x 3/4"M	30	48	161	10
ME688	3/4"F x 1"M	46	68	437	10
ME688H	3/4"F x 1"M	46	46	437	10
ME684	3/4"F x 1/2"M	44	60	343	10
ME684H	3/4"F x 1/2"M	44	60	343	10
ME886	1"F x 3/4"M	56	80	653	10
ME886H	1"F x 3/4"M	56	80	653	10
ME889	1"F x 1-1/2"M	54	90	1078	10

Universal Joint

M7 NO.		D	Total Length			
	inch	mm	inch	mm	g	
ME2711	1/4"	20	1-3/4"	65	42	10
ME3711	3/8"	27	2"	51	102	10
ME4711	1/2"	34	2-7/16"	61	208	10
ME6711	3/4"	49	3-1/2"	90.4	641	10
ME6711H	3/4"	49	3-1/2"	90.4	641	10
ME8711	1"	59	4-1/2"	114	1199	10
ME8711H	1"	59	4-1/2"	114	1199	10
ME9711	1-1/2"	90	6-11/16"	170	1312	10

3/4" ME906

3/4" Drive Locking Ring/3/4" Drive Locking Pin

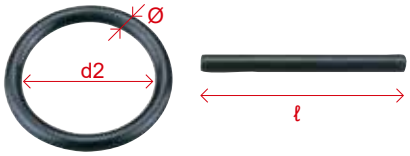

M7 NO.	Desp.	Ø	d2	ℓ	Applied to socket sizes
		mm	mm	mm	
ME90627	Ring	3.5	33		17~30mm
ME90627	Pin	3		30	(11/16"~1-3/16")
ME90646	Ring	5.5	37		17~46mm
ME90646	Pin	4		35	(1-1/16"~1-13/16")
ME90650	Ring	5.5	44		48mm~65mm
ME90650	Pin	4		45	(1-7/8"~2-3/8")

1/2" ME904

1/2" Drive Locking Ring / 1/2" Drive Locking Pin

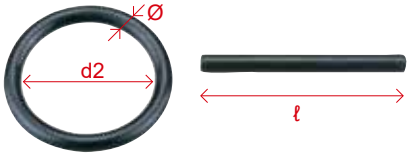

M7 NO.	Desp.	Ø	d2	ℓ	Applied to socket sizes
		mm	mm	mm	
ME90424	Ring	3.5	19		8~19mm
ME90424	Pin	3		20	(3/16"~9/16")
ME90436	Ring	3.5	23		15~46mm
ME90436	Pin	3		25	(5/8"~1-1/4")

1" ME908

1" Drive Locking Ring/1" Drive Locking Pin

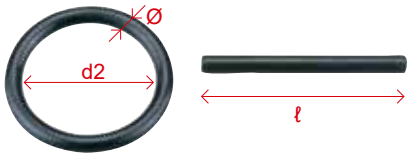

M7 NO.	Desp.	Ø	d2	ℓ	Applied to socket sizes
		mm	mm	mm	
ME90836	Ring	5.5	48		19~70mm
ME90836	Pin	5		45	(3/4"~2-3/4")
ME90860	Ring	10	75		71~90mm
ME90860	Pin	5		75	(2-13/16~3-1/2")

AD-22/23/24

48 pieces in one carton

Magnetic aluminum rail

M7 NO.	Drive	Total Length			
	inch	inch	mm	mm	g
AD-2212	1/4"	12"	300	25	10
AD-2312	3/8"	12"	300	25	10
AD-2412	1/2"	12"	300	25	10
AD-2218	1/4"	18"	457	26	10
AD-2318	3/8"	18"	457	26	10
AD-2418	1/2"	18"	457	26	10

3/8"MB371S

3/8" Drive Bit Holder

M7 NO.	Drive	Hex		
	inch		g	
MB371S08	3/8"	1/4"	43	10
MB471S08	1/2"	1/4"	76	10
MB471S10	1/2"	5/16"	78	10
MB471M10	1/2"	10 mm	80	10

SOCKET STICKERS PACK

100 pieces in one carton

M7 NO.	Drive
	inch
8702	1/4"
8703	3/8"
8704	1/2"
8706	3/4"
8708	1"

M7 NO.	Drive
	inch
8702-1	1/4"
8703-1	3/8"
8704-1	1/2"
8706-1	3/4"
8708-1	1"

AD-3511P Display security steel wire rope
AD-3511T Hook type base

Hook type base with card display
& display security steel wire rope

Contents :

AD-3511P :
1 x Display security steel wire rope
2x L Hex wrench
1x Hex socket screws

AD-3511T :
1x Acrylic Card Case hook type base

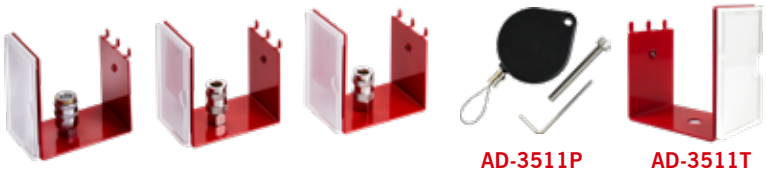

Item No.	Adaptor Type	Contents
AD-3511	Europe	SY-211M, AD-3521, AD-3511T
AD-3512	Japan	SY-221M, AD-3522, AD-3511T
AD-3513	U.S.A	SY-231M, AD-3521, AD-3511T

AD-35 Complete set of Tool Base

Item No.	Adaptor Type	Contents		
AD-3501	Europe	SY-211M	AD-3521	AD-351
AD-3502	Japan	SY-221M	AD-3522	AD-351
AD-3501	U.S.A	SY-231M	AD-3521	AD-351

AD-36 Complete set of Tool Base

Item No.	Adaptor Type	Contents		
AD-3601	Europe	SY-211M	AD-3521	AD-305-41
AD-3602	Japan	SY-221M	AD-3522	AD-305-41
AD-3601	U.S.A	SY-231M	AD-3521	AD-305-41

AD-309

DISPLAY BOARD

1 pieces in one carton

- Nice m7 brand image Is conducive to small space display hanging tools.
- Can also be used as a gift to the user to hang the tools.

Overall Size(mm) Width x Depth x Height
725 x 14 x 900 weight:11.5kg

AD-307

Wall Type Display Stand

- Powder coating
- Attachment
- 1pc Brand Plate
- 2pcs Angled Steel Frame
- 2pcs Shelf
- 1pc Bottom Shelf
- 4pcs Steel Plate With Hole

Overall Size(mm) Width x Depth x Height
900 x 500 x 2230

AD-351

Optional Item

AD-361

Optional Item

Overall Size(mm) Width x Depth
280 x 910 mm

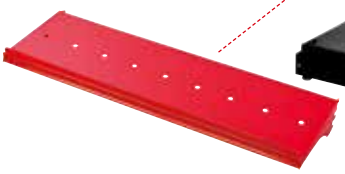

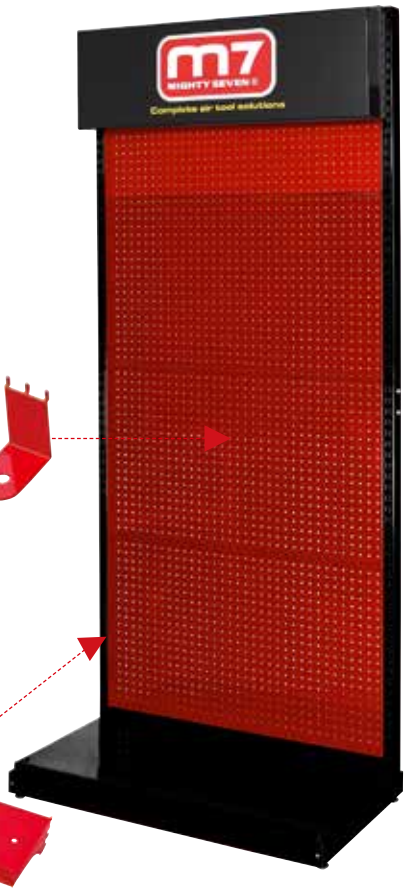

AD-308

Tower Type Display Stand

- 1 pc Transparent DM shelf
- 2 pcs support frame
- 1 pc Bottom shelf

AD-305-41

Optional Item

Package					
Contains	net weight kg	gross weight kg	length mm		width mm
Lamp Case Set	4.35	5.35	530	510	101
Display Pillar	8.0	9.0	930	330	180
Display Stand Bottom Plate	10.45	11.45	810	820	70

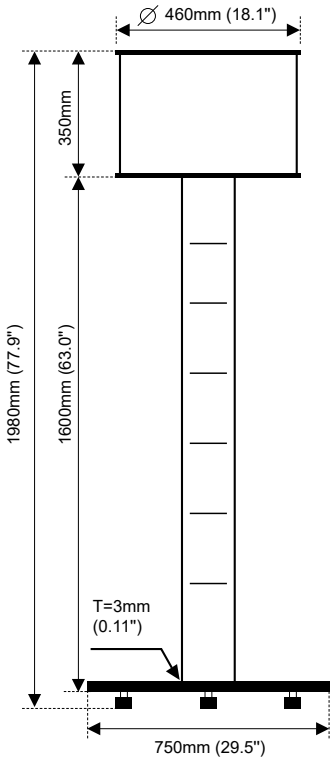

DISPLAY CASE

SF-306 / SF-604 SF-605

Spare Parts Box

- greasy-resisting
- wearproof

Overall Size(mm) Width x Depth x Height
SF-306 303 x 106 x 253 (11.8"x4.1"x1")
SF-604 603 x 167 x 203 (23.7"x6.5"x8")
SF-605 603 x 123 x 153 (23.7"x4.8"x6")

SF-306

SF-604

SF-605

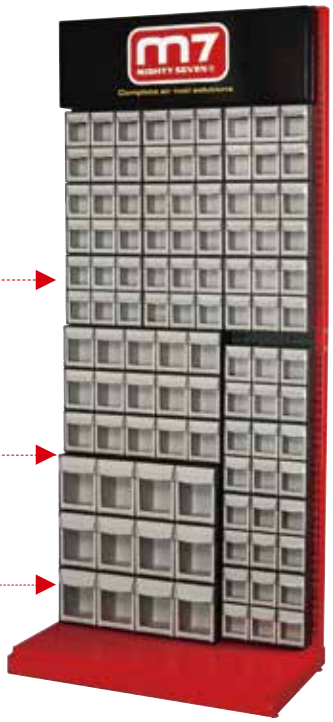

AD-306

Table Type Display Stand

- 1 pc Transparent DM shelf
- 2 pcs support frame
- 1 pc Bottom shelf
- 3 set (AD-3521/3522/3523)

Overall Size(mm) Width x Depth x Height
300 x 140 x 340

AD-201

1/2" DR. Socket Shelf Set

SH-1001

AIR TOOL HOLDER

AD-431

1/2" DR. Socket Shelf Set

ACCESSORIES

ZT-13-1 Forward
ZT-13-2 Reverse
TORQUE TEST MACHINE

Torque testing for maintaining pneumatic impact wrenches

- Applicable Range: 50ft-lb ~ 2000ft-lb(70Nm ~ 2700Nm)
- Max. Torque: 3500 ft-lb(5000Nm)
- Applicable Size:SQ.DR-1/2" ~ 3/4"
- Measuring Direction:ZT-13-1Forward/ZT-13-2Reverse
- Screw Size:M32
- Length x Width:35cm*30cm
- Weight:49KG

NON-VACCUM VELCRO

Backing Face : velcro

Blister+Card

ITEM NO.	SIZE	Max R.P.M
QB-9302	2"	15000
QB-9303	3"	15000
QB-9305	5"	12000
QB-9306	6"	12000

SIX HOLE

Backing Face : velcro
velcro & vinyl are both available

Blister+Card

ITEM NO.	SIZE	Max R.P.M
QB-9315 (velcro)	5"	12000
QB-9315 (vinyl)	5"	10000
QB-9315 (velcro)	6"	12000
QB-9315 (vinyl)	6"	12000

NON-VACCUM VINYL

Backing Face : vinyl

Blister+Card

ITEM NO.	SIZE	Max R.P.M
QB-9345	5"	12000
QB-9346	6"	12000

FIFTEEN HOLE

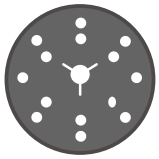

Backing Face : velcro
velcro & vinyl are both available

Blister+Card

ITEM NO.	SIZE	Max R.P.M
QB-9327 (velcro)	6"	12000
QB-9366 (vinyl)	6"	12000

QB-922 / QB-923

Roll On Holder

QB-922

2" Roll On Holder

QB-923

3" Roll On Holder

ITEM NO.	Size	Max R.P.M	For M7 Item No.
QB-922	2"	30,000	QP-212 QP-213 QP-223 QP-625
QB-923	3"	20,000	

QB-9337M
QB-9337S

7" Sanding Pad

ITEM NO.	Size	Max R.P.M	Thread Size	For M7 Item No.
QB-9337M	7"	15,000	M14*2.0	QB-307 QB-327
QB-9337S	7"	15,000	5/8"*11	QB-317

PAD DIE Series

5 pcs / 1 SET

Use on QB-922 & QB-923

Blister+Card

ITEM NO.	Size	PS.	Max R.P.M	For M7 Item NO.
QB-9702k-24	2"	Grit:#24	30,000	QP-212 QP-212N QB-625 QB-0618
QB-9702k-40		Grit:#40		
QB-9702k-60		Grit:#60		
QB-9702k-80		Grit:#80		
QB-9702k-100		Grit:#100		
QB-9702k-120		Grit:#120		
QB-9702k-150		Grit:#150		
QB-9702k-180		Grit:#180		
QB-9702k-240		Grit:#240		
QB-9703k-24	3"	Grit:#24	25,000	
QB-9702k-40		Grit:#40		
QB-9702k-60		Grit:#60		
QB-9702k-80		Grit:#80		
QB-9702k-100		Grit:#100		
QB-9702k-120		Grit:#120		
QB-9702k-150		Grit:#150		
QB-9702k-180		Grit:#180		
QB-9702k-320		Grit:#320		

PAD DIE Series

5 pcs / SET

Use on QB-922 & QB-923

Blister+Card

ITEM NO.	Size	PS.	Max R.P.M	For M7 Item NO.
QB-9712-YL	2"	Yellow-Coarse #80	30,000	QP-212 QP-212N QB-625 QB-0618
QB-9712-RD	2"	Red-Medium #150		
QB-9712-BL	2"	Blue-Fine #300		
QB-9713-YL	3"	Yellow-Coarse #80		
QB-9713-RD	3"	Red-Medium #150		
QB-9713-BL	3"	Blue-Fine #300		

ACCESSORIES

QB-95 SERIES

Wool Bonnet PAD

Bag+Card

ITEM NO.	Size	PS. .	For M7 Item NO.
0QB-9512	2"	Velcro	QB-9302 QB-9303 QB-9305 QB-9315
0QB-9513	3"	Velcro	
0QB-9515	5"	Velcro	
0QB-9517	7"	Velcro	
0QB-9507	7"	Tie Cords	

QB-94 SERIES

Sponge

Bag+Card

ITEM NO.	Size	PS.	Thickness	For M7 Item NO.
0QB-9402	2"	Yellow / Rough	25mm	QB-9302 QB-9303 QB-9305 QB-9306 QB-9315 QB-9316 QB-9327
0QB-9422	2"	White / Medium	25mm	
0QB-9403	3"	Yellow / Rough	25mm	
0QB-9413	3"	White / Medium	25mm	
0QB-9404	4"	Yellow / Rough	25mm	
0QB-9424	4"	White / Medium	25mm	
0QB-9405	5"	Yellow / Rough	25mm	
0QB-9425	5"	White / Medium	25mm	
0QB-9406	6"	Yellow / Rough	25mm	
0QB-9426	6"	White / Medium	25mm	
0QB-9407	7"	Yellow / Rough	25mm	
0QB-9427	7"	White / Medium	25mm	

QB-9712K
QB-9713K

Stripping Disc
Use on QB-922 & QB-923
Roll-on holder

5 pcs / 1 SET

ITEM NO.	SIZE	R.P.M
QB-9712K	2"	15,000
QB-9713K	3"	15,000

Bag+Card

QB-9434 FOR GLOBAL
QB-9434U FOR USA ONLY

Eraser Wheel
Available with
QB-812T

QB-9444 FOR GLOBAL
QB-9444U FOR USA ONLY

Eraser Wheel
Available with
QB-802 & QB-812

QB-9211A / B [SET]

Grinder Stone Set
A(3mm shank)**B**(1/8" shank)

Available with
QA-633Q QA-611 QA-632Q
QA-111 QA-211 QA-231Q
QA-311 QA-313 QA-315

Blister+Card

QB-9213A / B [SET]

Grinder Stone Set
A(6mm shank)**B**(1/4"shank)

Available with
M7 All Air Die Grinder

Blister+Card

QB-911 [SET]
QB-912 [SET]

Abrasive Cloth Belt

QB-91108
QB-91110

Available with
For QB-311 / QB-321

QB-91208
QB-91210

Available with
For QB-312 / QB-322 / QB-322C

ITEM NO.	Belt Size		For M7 Item NO.
QB-91108	10mm x 330mm #80	10Pcs/1 Set	QB-311 QB-321
QB-91110	10mm x 330mm #100	10Pcs/1 Set	
QB-91208	20mm x 520mm #80	10Pcs/1 Set	QB-322 QB-322C QB-312
QB-91210	20mm x 520mm #100	10Pcs/1 Set	

Bag+Card

QB-904 / QB-905 / QB-907

Grinding Wheel Materials:Aluminum Oxide

ITEM NO.	Specification		For M7 Item NO.
0QB-904	100 x 6 x 16 4" x 1/4" x 5/8" 102mm	25 / 200	(QB-904) : QB-104,QB-114,QB-124,QB-134,QB-144,QB-154,QB-164,QB-194,QB-194N,QB-194L,QB-7114 (QB-905) : QB-115,QB-125,QB-135,QB-145,QB-155,QB-165,QB-185,QB-195,QB-7115 (QB-907) : QB-107,QB-117,QB-177,QB-187,QB-197
0QB-905	125 x 6 x 22 5" x 1/4" x 7/8" 127mm	25 / 200	
0QB-907	180 x 6 x 22 7" x 1/4" x 7/8" 128mm	25 / 200	

QB-913 / QB-914

Cut-off Wheel

ITEM NO.	Specification		For M7 Item NO.
0QB-913	75 x 1.5 x 10 3" x 1/16" x 3/8" 76mm	25 / 200	QC-213 / QC-213T / QC-253
0QB-914	100 x 1.5 x 10 4" x 1/16" x 3/8" 102mm	25 / 200	QC-213 / QC-213T / QC-253 / QC-264

ACCESSORIES

QD-932P

32T Saw Blade
Bi-Metal Material

Available with
QD-221 & QD-291

10 pcs / box

Blister+Card

Blister+Card

QD-924P

24T Saw Blade
Bi-Metal Material

Available with
QD-221 & QD-291

10 pcs / box

Blister+Card

QD-905P

4 Pieces File Set clamshell pack

20 pcs in one carton

For QD-291 / 230

Blister+Card

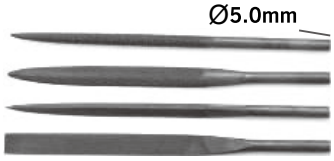

Blister+Card

QD-906P

5 Pieces File Set clamshell pack

20 pcs in one carton

For QD-221

Blister+Card

QM-901

Universal repairing kit for
Auto-Transmission shaft boot

Available with QM-1125

QD-901

Adjustable Toeque Air Tapping Adapter
HEX:8mm

For: Air Drill / Electricity Drill
Cordless Drill / Drill Machine

Blister+Card

SN-9101 / SN-9103
SN-9201 / SN-9203

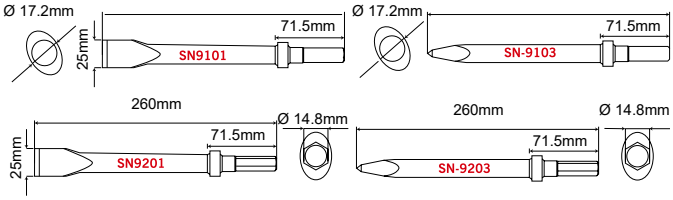

CHISEL

For SN-31 / SC-32 SERIES

PA-MC

Automatic Mandrel Collection

CAPACITY

3/32"(2.4mm) 220pcs
1/8" (3.2mm) 160pcs
5/32"(4.0mm) 110pcs
3/16"(4.8mm) 80pcs

PE-MC

Standard Safety Tip

SW-12(1/4")
SW-13(3/8")

Mini Lubricator
Install on the air inlet to provide automatic lubrication
8c.c. lubricating oil capacity

Blister+Card

Box

Blister

MA-412M1719

Double Sided Socket
2" Extended Anvil matching special double sided socket 17mm & 19mm specifically for automotive tyres.

MA-412M2122

Double Sided Socket
2" Extended Anvil matching special double sided socket 21mm & 22mm specifically for automotive tyres.

MA-412S2426

Double Sided Socket
2" Extended Anvil matching special double sided socket 24mm & 26mm specifically for automotive tyres.

NC-4255PVC

Protective Boot

The NC-4255-PVC Protective Boot can apply on NC-4255 & NC-6255

Bag+Card

SC-415P CHISEL SET
SC-425P CHISEL SET

- SC-415 - Chisel Set / 175mmL / Round
- SC-425 - Chisel Set / 175mmL / Hex

Available with

SC-331C / SC-341C / SC-332C / SC-342C
SC-211C / SC-221C / SC-212C / SC-222C

Flat Chisel
SC-4101 Round / SC-4201 Hex

Cutting Chisel
SC-4102 Round / SC-4202 Hex

Tapered Punch
SC-4103 Round / SC-4203 Hex

Ripping Chisel
SC-4104 Round / SC-4204 Hex

Tail Pipe Cutter
SC-4105 Round / SC-4205 Hex

Blister+Card

QK-Series

Air Knife Blade

For QK-111 / QK-121 / QK-131 / PN-250 / PN-280

QK-111P51

QK-111P52

QK-111P53

QK-111P54

QK-111P50

QK-111P08

QK-2036

QK-2063

QK-2090

Blister

0QK-2030P - QK-111P08
0QK-1057P - QK-111P50
0QK-3018P - QK-111P51
0QK-3036P - QK-111P52
0QK-1008P - QK-111P54

SN-124 SN-268
SN-128 SN-288

BOX

Needle Set

SN-288
(12 Needle Set) 3 x 125mm

Available with
SN-1288

SN-268
(19 Needle Set) 3 x 180mm

Available with
SN-1268 / 2110 / 1368

SN-124
(24 Needle Set) 3 x 180mm

Available with
SN-2124

SN-128
(28 Needle Set) 3 x 180mm

Available with
SN-2128

SB-902

0-90° Angle Adjustable One Touch Chuck Adaptor

Available with
SB Series TYRE INFLATOR

SC-2B

Quick Change Retainer

Available with
For SC-21 / SC-22 / SC-31 / SC-34 SERIES

SC-2A

Retainer

SG-101

Lubrication Kit

SO-10

Lubrication

SO-10T

Lubrication Kit

PA-9048
4.8mm (3/16") Riveter Adaptor

PB-9006
M6 Rivet Nut Adaptor

PA-9064
6.35mm (1/4") Riveter Adaptor

PB-9010
M10 Rivet Nut Adaptor

Assembling And Using Before First Use

Remove the unit and the accessory out of the packaging.
Keep packaging materials out of reach of children.
There is risk of suffocation.

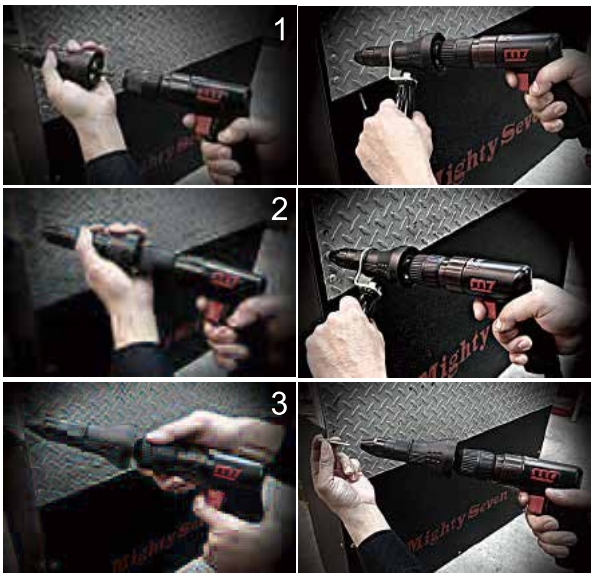

Technical Data

PA-9064

Dimensions	59mm x 173mm(2-11/32" x 6-3/4")
Net Weight	330 g = 0.73 lbs
Gross Weight	500 g = 1.10 lbs
Nosepiece	3.2mm(1/8") , 4.0mm(5/32")
Nosepiece	4.8mm(3/16") , 6.4mm(1/4")
Hex Shank	1/4"(6.35mm)
Cordless Drill	14.4V , 18V
Cordless Drive	14.4V , 18V
Reversible Electric	1/2" Drill
Reversible Pneumatic	1/2" Drill
Min. Torque Strength	50 Nm = 37 ft/lbs
Max. R.P.M	1,000 rpm

1. Hex Shank	1/4"(6.35mm)
2. Housing	PA+GF
3. Nosepiece	3.2mm , 4.0mm , 4.8mm , 6.4mm
4. Sight Window	Blind Rivet Loading
5. Wrench	1PC
6. Handle	1PC

PA-9048

Dimensions	59mm x 158mm(2-11/32" x 6-3/16")
Net Weight	318 g = 0.70 lbs
Gross Weight	368 g = 0.81 lbs
Nosepiece	2.4mm(3/32") , 3.2mm(1/8")
Nosepiece	4.0mm(5/32") , 4.8mm(3/16")
Hex Shank	1/4"(6.35mm)
Cordless Drill	12V , 14.4V , 18V
Cordless Drive	12V , 14.4V , 18V
Reversible Electric	3/8" Drill
Reversible Pneumatic	3/8" Drill
Min. Torque Strength	11 Nm = 8 ft/lbs
Max. R.P.M	1,000 rpm

1. Hex Shank	1/4"(6.35mm)
2. Housing	PA+GF
3. Nosepiece	2.4mm , 3.2mm , 4.0mm , 4.8mm
4. Sight Window	Blind Rivet Loading
5. Wrench	1PC

PB-9006

Dimensions	59mm x 173mm(2-11/32" x 6-3/4")
Net Weight	280 g = 0.62 lbs
Nosepiece	M3 , M4 , M5 , M6
Hex Shank	1/4"(6.35mm)
Cordless Drill	12V , 14.4V
Cordless Drive	12V , 14.4V
Reversible Electric	Drill (Advice 500W)
Reversible Pneumatic	Drill (Advice 3/8")
Min. Torque Strength	15 Nm = 11 ft/lbs
Max. R.P.M	1,000 rpm

PB-9010

Dimensions	59mm x 180mm(2-11/32" x 7-3/32")
Net Weight	350 g = 0.77 lbs
Nosepiece	M6 , M8 , M10
Hex Shank	1/4"(6.35mm)
Cordless Drill	14.4V
Cordless Drive	18V
Reversible Electric	Drill (Advice 500W)
Reversible Pneumatic	Drill (Advice 1/2")
Min. Torque Strength	100 Nm = 73.7 ft/lbs
Max. R.P.M	800 rpm

QB-9303K04

Blister+Card

3" Sander / Buffer Versatility Kit

Thread : 5/16" x 24
MAX : 15,000 R.P.M
For QP-113 / QP-123 / QP-213 / QP-223

CONTENTS :

3" Sanding Pad x 1PC
3" Foam Yellow x 1PC
3" Foam White x 1PC
3" Wool Bonnet x 1PC

Max R.P.M : 15,000

Backing Face :
Velcro Available

QB-9773K19

3" Polishing Sponge Kit

MAX : 15,000 R.P.M
For QP-113 / QP-123 / QP-213 / QP-223

Blister+Card

SHANK TYPE

QB-9773K19A : 6mm
QB-9773K19B : 1/4"

CONTENTS :

Shank x 1 PC (A or B)

3" Sanding Pad x 1PC
3" Sanding Sponge x 6PCS
3" Sanding Paper x 10PCS
3" Polishing Sponge x 2PCS

QB-9752K07

Blister+Card

2" Felt Pad Conditioning Disc Kit

MAX : 20,000 R.P.M
For QP-113 / QP-123 / QP-213 / QP-223

SHANK TYPE

QB-9752K07A : 6mm
QB-9752K07B : 1/4"

CONTENTS :

2" Felt Pad x 6PCS

QB-9762K07

2" Surface Pad Conditioning Disc Kit

MAX : 20,000 R.P.M
For QP-113 / QP-123 / QP-213 / QP-223

Blister+Card

SHANK TYPE

QB-9762K07A : 6mm
QB-9762K07B : 1/4"

CONTENTS :

Shank x 1 PC (A or B)
2" Stripping Disc x 2PCS

2" CONDITIONING DISC :

Red x 2PCS
Grey x 2PCS

QB-974K12

Blister+Card

2" & 3" Surface Sanding Kit

2" Max : 30,000 R.P.M
3" Max : 20,000 E.P.M
For QP-212 / QP-213 / QP-223 / QP-625

SHANK TYPE

QB-974K12A : 6mm
QB-974K12B : 1/4"

CONTENTS :

Shank x 2 PC (A or B)

2" Rollon Holder x 1PC
3" Rollon Holder x 1PC
2" Sanding Disc x 4PCS
3" Sanding Disc x 4PCS

QB-9742K20

Blister+Card

2" Surface Sanding Kit

MAX : 30,000 R.P.M
For QP-212 / QP-213 / QP-223 / QP-625

SHANK TYPE

QB-9742K20A : 6mm
QB-9742K12B : 1/4"

CONTENTS :

Shank x 1 PC (A or B)
2" Rollon Holder x 1PC
2" Pad Die x 15PCS
2" Sanding Disc x 3PCS

QB-9742K12

Blister+Card

2" Surface Sanding Kit

MAX : 30,000 R.P.M
For QP-212 / QP-213 / QP-223 / QP-625

CONTENTS :

Shank x 1 PC (A or B)

2" Rollon Holder x 1PC
2" Pad Die x 6PCS
2" Sanding Disc x 3PCS
2" Stripping Disc x 1PC

QB-9743K12

Blister+Card

3" Surface Sanding Kit

MAX : 20,000 R.P.M
For QP-212 / QP-213 / QP-223 / QP-625

SHANK TYPE

QB-9743K12A : 6mm
QB-9743K12B : 1/4"

CONTENTS :

Shank x 1 PC (A or B)

3" Rollon Holder x 1PC
3" Pad Die x 6PCS
3" Sanding Disc x 3PCS
3" Stripping Disc x 1PC

QB-9743K20

Blister+Card

3" Surface Sanding Kit

MAX : 20,000 R.P.M
For QP-212 / QP-213 / QP-223 / QP-625

SHANK TYPE

QB-9743K20A : 6mm
QB-9743K20B : 1/4"

CONTENTS :

Shank x 1 PC (A or B)

3" Rollon Holder x 1PC
3" Pad Die x 15PCS
3" Sanding Disc x 3PCS

Sanding Paper Series

Velcro / Self-Adhesive
Six hole / Non-Vacuum

5 pcs or 10 pcs / 1 SET

Self-Adhesive

ITEM NO.	Size	PS.	Velcro / Self-AD	For M7 Item NO.	Holes	pcs / set
0QB-9913S-08K10	3"	Grit:#80	Self-Adhesive	QP-113 QP-123	Non	10
0QB-9913S-15K10		Grit:#150				
0QB-9913S-18K10		Grit:#180				
0QB-9913S-32K10		Grit:#320				
0QB-9913S-40K10		Grit:#400				
0QB-9915S-08K5	5"	Grit:#80		QB-41 QB-42 QB-43 QB-45 QB-46 QB-47 QB-51 QB-52 QB-53 QB-54 QB-56 QB-57 QB-58 QB-59		5
0QB-9915S-15K5		Grit:#150				
0QB-9915S-18K5		Grit:#180				
0QB-9915S-32K5		Grit:#320				
0QB-9915S-40K5		Grit:#400				
0QB-9916S-08K5	6"	Grit:#80				
0QB-9916S-15K5		Grit:#150				
0QB-9916S-18K5		Grit:#180				
0QB-9916S-32K5		Grit:#320				
0QB-9916S-40K5		Grit:#400				
0QB-9905S-08K5	5"	Grit:#80			6	
0QB-9905S-15K5		Grit:#150				
0QB-9905S-18K5		Grit:#180				
0QB-9905S-32K5		Grit:#320				
0QB-9905S-40K5		Grit:#400				
0QB-9906S-08K5	6"	Grit:#80				
0QB-9906S-15K5		Grit:#150				
0QB-9906S-18K5		Grit:#180				
0QB-9906S-32K5		Grit:#320				
0QB-9906S-40K5		Grit:#400				

Velcro

ITEM NO.	Size	PS.	Velcro / Self-AD	For M7 Item NO.	Holes	pcs / set
0QB-9913V-08K10	3"	Grit:#80	Velcro	QP-113 QP-123	Non	10
0QB-9913V-15K10		Grit:#150				
0QB-9913V-18K10		Grit:#180				
0QB-9913V-32K10		Grit:#320				
0QB-9913V-40K10		Grit:#400				
0QB-9915V-08K5	5"	Grit:#80		QB-41 QB-42 QB-43 QB-45 QB-46 QB-47 QB-51 QB-52 QB-53 QB-54 QB-56 QB-57 QB-58 QB-59		5
0QB-9915V-15K5		Grit:#150				
0QB-9915V-18K5		Grit:#180				
0QB-9915V-32K5		Grit:#320				
0QB-9915V-40K5		Grit:#400				
0QB-9916V-08K5	6"	Grit:#80				
0QB-9916V-15K5		Grit:#150				
0QB-9916V-18K5		Grit:#180				
0QB-9916V-32K5		Grit:#320				
0QB-9916V-40K5		Grit:#400				
0QB-9905V-08K5	5"	Grit:#80			6	
0QB-9905V-15K5		Grit:#150				
0QB-9905V-18K5		Grit:#180				
0QB-9905V-32K5		Grit:#320				
0QB-9905V-40K5		Grit:#400				
0QB-9906V-08K5	6"	Grit:#80				
0QB-9906V-15K5		Grit:#150				
0QB-9906V-18K5		Grit:#180				
0QB-9906V-32K5		Grit:#320				
0QB-9906V-40K5		Grit:#400				

SZ-212A

AIR REGULATOR

FEATURES

- Used to adjust the air inlet flow of pneumatic tools
- Easy to mount

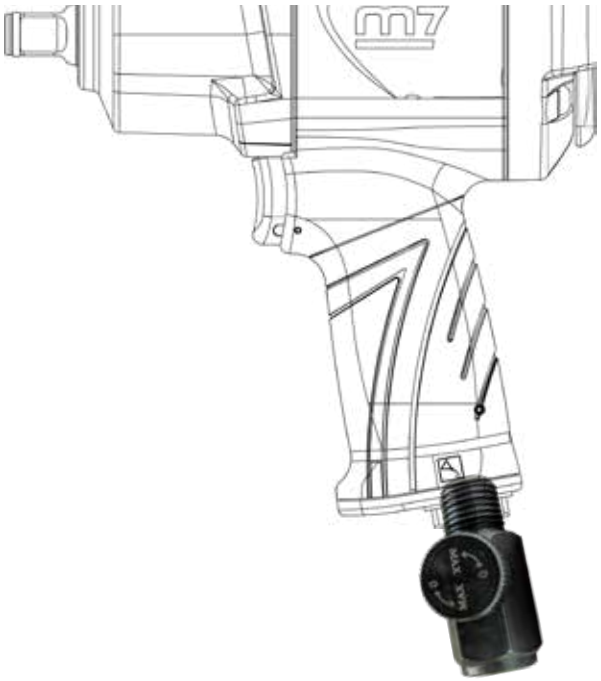

ACCESSORIES

AIR ADAPTOR QUICK COUPLINGS

SY-2001M

Air Inlet 1/4"
360° Rotatable Adaptor

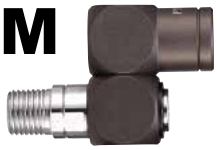

SY-2002M

Air Inlet 1/4"
Air Regulator & 360°
Rotatable Adaptor

Blister+Card

SY-M SY-F Air Adaptor / Quick Couplings

Item No.	Thread Type	Thread Size	Type	Picture
SY-211M SY-211F	Male Female	1/4" PT	Europe	
SY-221M SY-321M	Male	1/4" PT 3/8" PT	Japan	
SY-221F SY-321F	Female	1/4" PT 3/8" PT		
SY-231M SY-231F	Male Female	1/4" NPT	U.S.A	
SY-251M SY-351M	Male	1/4" PT 3/8" PT	France	
SY-251F SY-351F	Female	1/4" PT 3/8" PT		

Item No.	Thread Type	Thread Size	Type	Picture
SY-210M SY-210F	Male Female	1/4" PT	Europe U.S.A	Female Male
SY-220M SY-320M	Male	1/4" PT 3/8" PT	Japan	Female Male
SY-220F SY-320F	Female	1/4" PT 3/8" PT		

Blister+Card

Composite Quick Coupling

Item No.	Thread Type	Thread Size	Type	Picture
SY-0213M SY-0313M SY-0413M	Male	1/4" PT 3/8" PT 1/2" PT	Europe	
SY-0223M SY-0323M SY-0423M	Male	1/4" PT 3/8" PT 1/2" PT	Japan	
SY-0233M SY-0333M SY-0433M	Male	1/4" PT 3/8" PT 1/2" PT	U.S.A France	

Item No.	Thread Type	Thread Size	Type	Picture
SY-1213F SY-1313F SY-1413F	Female	1/4" PT 3/8" PT 1/2" PT	Europe	
SY-1223F SY-1323F SY-1423F	Female	1/4" PT 3/8" PT 1/2" PT	Japan	
SY-1233F SY-1333F SY-1433F	Female	1/4" PT 3/8" PT 1/2" PT	U.S.A France	

Item No.	Thread Type	Thread Size	Type	Picture
SY-2213P SY-2313P SY-2413P	-----	5x8 PU 6.5x10 PU 8x12 PU	Europe	
SY-2223P SY-2323P SY-2423P	-----	5x8 PU 6.5x10 PU 8x12 PU	Japan	
SY-2233P SY-2333P SY-2433P	-----	5x8 PU 6.5x10 PU 8x12 PU	U.S.A France	

Item No.	Thread Type	Thread Size	Type	Picture
SY-3113H SY-3213H SY-3313H SY-3413H	-----	10SH 1/4" 20SH 5/16" 30SH 3/8" 40SH 1/2"	Europe	
SY-3123H SY-3223H SY-3323H SY-3423H	-----	10SH 1/4" 20SH 5/16" 30SH 3/8" 40SH 1/2"	Japan	
SY-3133H SY-3233H SY-3333H SY-3433H	-----	10SH 1/4" 20SH 5/16" 30SH 3/8" 40SH 1/2"	U.S.A France	

POWER BIT

1/4" POWER BIT
(PHILLIPS HEAD)

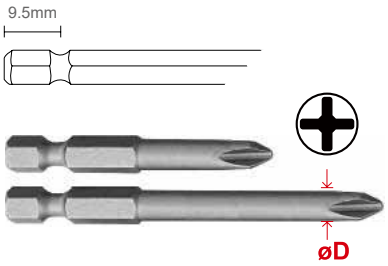

"OVERALL LENGTH(mm)"	SIZE	ITEM NO.	ØD(mm)
25	2	MD50125P2A	6
	2	MD50125P2R	6
50	0	MD10150P0A	3
	1	MD10150P1A	4.5
	2	MD10150P2A	6
	3	MD10150P3A	6
70	1	MD10170P1A	4.5
	2	MD10170P2A	6
	3	MD10170P3A	6

1/4" POWER BIT
(POZIDRIV HEAD)

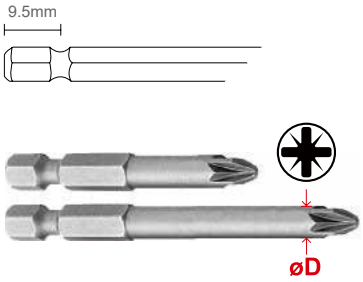

"OVERALL LENGTH(mm)"	SIZE	ITEM NO.	ØD(mm)
25	2	MD50125Z2A	6
50	0	MD10150Z0A	3
	1	MD10150Z1A	4.5
	2	MD10150Z2A	6
	3	MD10150Z3A	6
70	1	MD10170Z1A	4.5
	2	MD10170Z2A	6
	3	MD10170Z3A	6

1/4" POWER BIT
(STAR TAMPER HEAD)

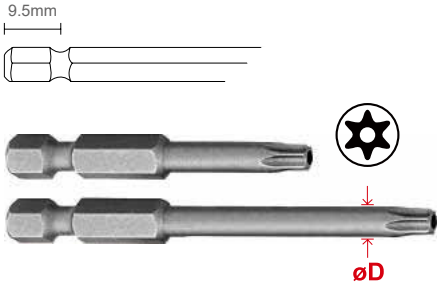

"OVERALL LENGTH(mm)"	SIZE	ITEM NO.	ØD(mm)
90	10	MD10190TT10A	4
	15	MD10190TT15A	4
	20	MD10190TT20A	4.8
	25	MD10190TT25A	4.8
	30	MD10190TT30A	6

"OVERALL LENGTH(mm)"	SIZE	ITEM NO.	ØD(mm)
50	6	MD10150TT06A	3.2
	7	MD10150TT07A	3.2
	8	MD10150TT08A	3.2
	9	MD10150TT09A	3.2
	10	MD10150TT10A	4
	15	MD10150TT15A	4
	20	MD10150TT20A	4.8
	25	MD10150TT25A	4.8
	27	MD10150TT27A	6
	30	MD10150TT30A	6
	40	MD10150TT40A	6.3
70	6	MD10170TT06A	3.2
	7	MD10170TT07A	3.2
	8	MD10170TT08A	3.2
	9	MD10170TT09A	3.2
	10	MD10170TT10A	4
	15	MD10170TT15A	4
	20	MD10170TT20A	4.8
	25	MD10170TT25A	4.8
	27	MD10170TT27A	6
	30	MD10170TT30A	6
	40	MD10170TT40F	6.3
	45	MD10170TT45E	8
	50	MD05170TT50E	9.1

1/4" POWER BIT

(DOUBLE PHILLIPS HEAD)

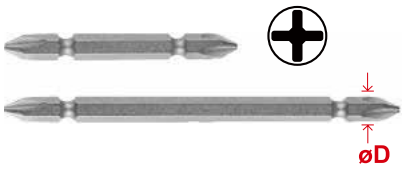

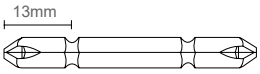

"OVERALL LENGTH(mm)"	SIZE	ITEM NO.
65	1	MD10165P1P1A
	2	MD10165P2P2A
	3	MD10165P3P3A
110	1	MD101110P1P1A
	2	MD101110P2P2A
	3	MD101110P3P3A

1/4" POWER BIT

(HEX HEAD)

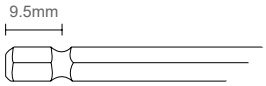

"OVERALL LENGTH(mm)"	A(mm)	ITEM NO.
150	2.5	MD101150H025A
	3	MD101150H030A
	4	MD101150H040A
	5	MD101150H050A
	6	MD101150H060A

"OVERALL LENGTH(mm)"	A(mm)	ITEM NO.
50	1.5	MD10150H015A
	2	MD10150H020A
	2.5	MD10150H025A
	3	MD10150H030A
	4	MD10150H040A
	5	MD10150H050A
	6	MD10150H060F
	7	MD10150H070E
	8	MD10150H080E
	10	MD10150H100E
70	1.5	MD10170H015A
	2	MD10170H020A
	2.5	MD10170H025A
	3	MD10170H030A
	4	MD10170H040A
	5	MD10170H050A
	6	MD10170H060F
	7	MD10170H070E
	8	MD10170H080E
	10	MD05170H100E

1/4" POWER BIT

(STAR HEAD)

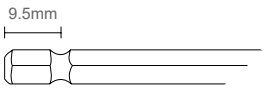

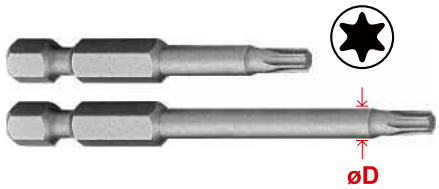

"OVERALL LENGTH(mm)"	SIZE	ITEM NO.	ØD(mm)
25	20	MD10125T20A	4.8

"OVERALL LENGTH(mm)"	SIZE	ITEM NO.	ØD(mm)
50	6	MD10150T06A	3.2
	7	MD10150T07A	3.2
	8	MD10150T08A	3.2
	9	MD10150T09A	3.2
	10	MD10150T10A	4
	15	MD10150T15A	4
	20	MD10150T20A	4.8
	25	MD10150T25A	4.8
	27	MD10150T27A	6
	30	MD10150T30A	6
	40	MD10150T40F	7
	45	MD10150T45E	8
	50	MD05150T50E	9.1
70	6	MD10170T06A	3.2
	7	MD10170T07A	3.2
	8	MD10170T08A	3.2
	9	MD10170T09A	3.2
	10	MD10170T10A	4
	15	MD10170T15A	4
	20	MD10170T20A	4.8
	25	MD10170T25A	4.8
	27	MD10170T27A	6
	30	MD10170T30A	6
	40	MD10170T40F	7
	45	MD10170T45E	8
	50	MD10170T50E	9.1
	45	MD08170T45E	8
	50	MD05170T50E	9.1

MERCHANDISE

ZC-201
T-shirt

ZC-501

SIZE	S	M	L	XL	2XL
	3XL	4XL	3L	4L	5L

ZB-9156
LED Pen light

LED x 4pcs
No. 4 battery x 3pcs included

ZB-812
Anti-vibration Glove

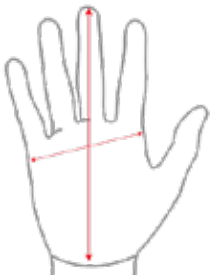

Palm length :
Distance between middle finger to bottom of the palm
Palm width :
Distance between left side and right side of the palm
CE EN388 2121X

Item Description	length(cm)	wide(cm)
M	21.3	10.5
L	22	11
XL	22.7	11.5
XXL	23.4	12

ZB-814
Half Finger Blade Cut Resistance Glove

ZC-202-1
Baseball Cap

ZC-203
Sports Cap

ZB-306
Pen(Stylus)
- Pen with touch function

ZB-307
Pen

ZB-604
USB drive
- 8GB USB Flash Drive

ZC-111
TOOL Bag
37*24*23cm

ZC-112
TOOL Bag
(rubber base)
40*22*30cm

ZH-104
Mini usb LED Flashlight

ZF-01
WING PROTECTOR COVER

ZC-301
Stickers

100x112mm

ZC-107
Bag

ZF-02
WING PROTECTOR COVER

ZC-302
Stickers

200x110mm

ZM-101
27" Automatic umbrella

ZG-101
Watch

ZC-303
Stickers

199x106mm

ZC-304
Stickers

288x156mm

ZE-03
Kneeling Pad

MERCHANDISE

User's Manual of Air Impact Wrench

Working environment:

- Using these tools in any potentially explosive environment is strictly
- prohibited.

  It is always recommended that these types of tools must be operated when
- standing on a solid or firm location.
- Always use these tools in a well ventilated area.

  Slipping, stumbling and falling are the major causes of potential serious injury, therefore, a clean and clutter free surface in the working area before operating the tools is strongly recommended.

Air supply and connection requirements:

- The maximum recommended air pressure during operation must not exceed 90 psi (6.3bar). Higher air pressure may create unsafe operating conditions for the tool and the user.
- The compressed air should be cooled and have a water filter installed at the outlet end of the compressor. Even with a water filter installed, some water may still condense in the piping or hose and will enter the tool mechanism causing premature damage to the tool. Therefore, it is recommended to install an air filter-lubricator device somewhere between the tool and the
- compressor.
- Always use an air compressor of the proper capacity to operate each tool.

  Clean the hose with a blast of compressed air before connecting the hose to the air tool. This will prevent both moisture and dust inside the hose from entering the tool and causing possible rust or malfunction.

Air Tool Repair Kits

M7 provides specialized repairing tools for your after market need

Ideal system connection

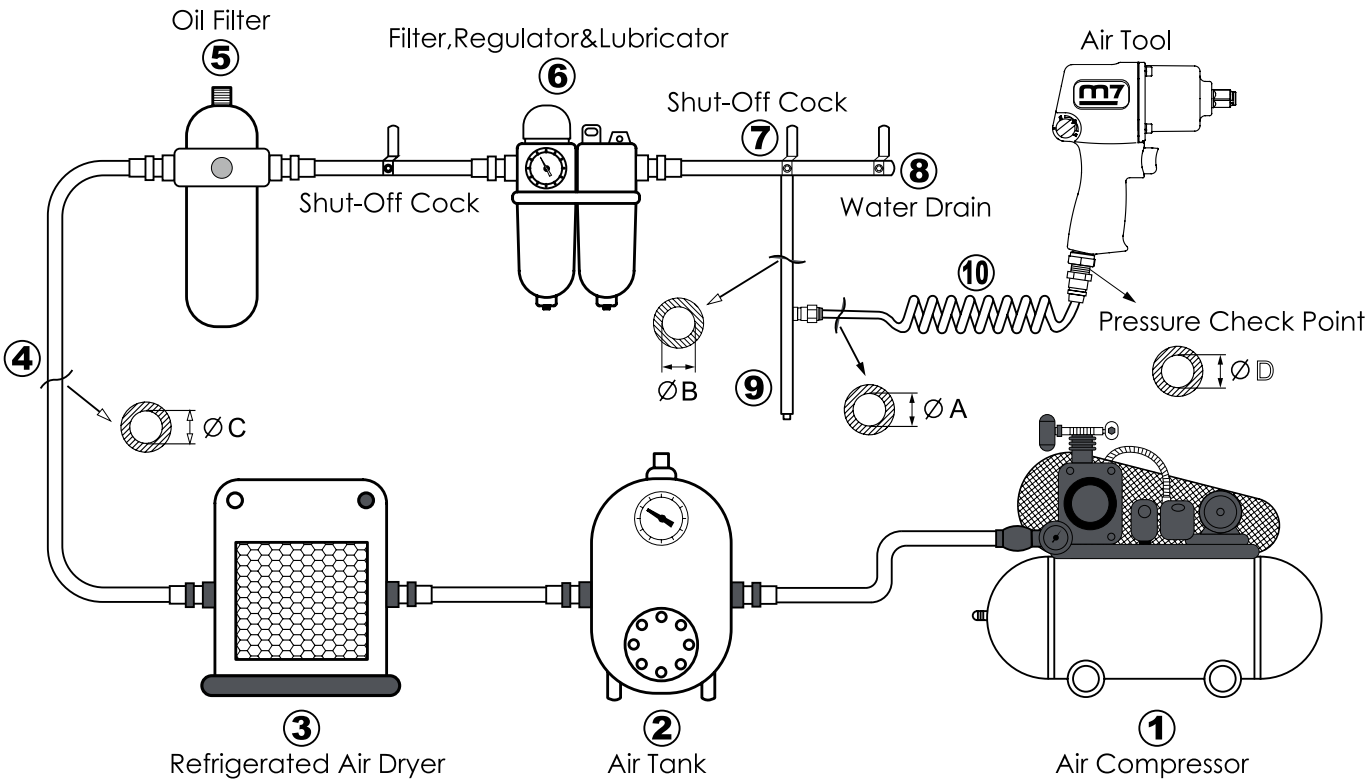

Piping diameters and length requirement:

- The diameter ΦA required for the inlet pipe ⑩ is recommended on the specification table.
- The diameter ΦB required for the branch pipe (from ❼ to ❾) should be 2 times as large as ΦA. ΦB = 2 x ΦA
- The diameter ΦC required for the primary air supply (from ❶ to ❽) should be 3 times as large as ΦA. ΦC = 3 x ΦA
- The length for the inlet pipe ⑩ should be less than 15 feet (4.5m).

IMPACT WRENCH

Problem (phenomenon)	Possible Cause	Recommended solution
1. The tool runs automatically or tool will not shut off. 2. Torque decreases slightly. 3. Sound of air leaking.	1. Dust jam.	1. Clean and remove the dust from the air inlet. 2. Clean the throttle valve. 3. Apply a few drops of recommended pneumatic oil into the air inlet. 4. Pull the trigger and run for several seconds to get rid of the dust.
1. Severe torque loss, but will still run at full free speed, 2. Tool will not run.	1. The rotor blades may be damaged, 2. The screws may be loose. 3. The reverse button (knob) may be out off position. 4. Some component(s) in motor housing or hammer housing may be worn off.	1. Check and replace new ones, if necessary. 2. Tighten all loose screws. 3. Adjust the button. 4. Check and replace them, if necessary.
1. Air leaks from hammer housing or rear cover.	1. The screws may be loose. 2. The gasket seal may be broken.	1. Tighten all loose screws. 2. Replace it.

Note: The consumable parts are the rotor blades, anvil and hammer.

RATCHET WRENCH

Problem (phenomenon)	Possible Cause	Recommended solution
1. The tool runs automatically or tool will not shut off. 2. Torque decreases slightly. 3. Sound of air leaking.	1. Dust jam.	1. Clean and remove the dust from the air inlet. 2. Clean the throttle valve. 3. Apply a few drops of recommended pneumatic oil into the air inlet. 4. Pull the trigger and run for several seconds to get rid of the dust.
1. Severe torque loss, but will still run at full free speed, 2. Tool will not run.	1. The rotor blades may be damaged, 2. The screws may be loose. 3. The reverse button (knob) may be out off position. 4. Some component(s) in motor housing or hammer housing may be worn off.	1. Check and replace new ones, if necessary. 2. Tighten all loose screws. 3. Adjust the button. 4. Check and replace them, if necessary.

Note: The consumable parts are the rotor blades, gears and ratchet anvil.

DIE GRINDER

Problem (phenomenon)	Possible Cause	Recommended solution
1. The tool runs automatically or tool will not shut off. 2. Torque decreases slightly. 3. Sound of air leaking.	1. Dust jam. 2. Trigger may be damaged!	1. Clean to remove the dust from the air inlet. 2. Clean the throttle valve. 3. Apply a few drops of recommended pneumatic oil into the air inlet. 4. Push trigger and run for several seconds to get rid of the dust. 5. Inspect the trigger, correct or replace the related component when necessary.
1. Severe torque loss, but will still run at full free speed, 2. Tool will not run.	1. The rotor blades may be damaged, 2. The screws may be loose. 3. The Air Regulator may not be in correct position. 4. The Collet Nut may be loose.	1. Check and replace with new ones, if necessary. 2. Tighten all loose screws. 3. Check and correct. 4. Check and tighten.

Note: The consumable parts are the rotor blades, bearings and collet.

AIR CUTTING OFF TOOL

Problem (phenomenon)	Possible Cause	Recommended solution
1. The tool runs automatically or tool will not shut off. 2. Torque decreases slightly. 3. Sound of air leaking.	1. Dust jam. 2. Trigger may be damaged!	1. Clean and remove the dust from the air inlet. 2. Clean the throttle valve. 3. Apply a few drops of recommended pneumatic oil into the air inlet. 4. Push trigger and run for several seconds to get rid of the dust. 5. Inspect the trigger, correct or replace the related component when necessary.
1. Severe torque loss, but will still run at full free speed, 2. Tool will not run.	1. The rotor blades may be damaged, 2. The screws may be loose. 3. The Air Regulator may not be in correct position.	1. Check and replace with new ones, if necessary. 2. Tighten all loose screws. 3. Check and correct.
Note: The consumable parts are the rotor blades and bearings.		

AIR ANGLE GRINDER

Problem (phenomenon)	Possible Cause	Recommended solution
1. The tool runs automatically or tool will not shut off. 2. Torque decreases slightly. 3. Sound of air leaking.	1. Dust jam. 2. Trigger may be damaged!	1. Clean and remove the dust from the air inlet. 2. Clean the throttle valve. 3. Apply a few drops of recommended pneumatic oil into the air inlet. 4. Push trigger and run for several seconds to get rid of the dust. 5. Inspect the trigger, correct or replace the related component when necessary.
1. Severe torque loss, but will still run at full free speed. 2. Tool will not run.	1. The rotor blades may be damaged, 2. The screws may be loose. 3. The bevel gears may not have enough grease. 4. The bevel gears may be worn off.	1. Check and replace new ones, if necessary. 2. Tighten all loose screws. 3. Apply some multiple-purpose grease. 4. Replace them.
Note: The consumable parts are the rotor blades and bearings.		

BELT SANDER

Problem (phenomenon)	Possible Cause	Recommended solution
1. The tool runs automatically or tool will not shut off. 2. Torque decreases slightly. 3. Sound of air leaking.	1. Dust jam.	1. Clean and remove the dust from the air inlet. 2. Clean the throttle valve. 3. Apply a few drops of recommended pneumatic oil into the air inlet. 4. Pull the trigger and run for several seconds to get rid of the dust.
1. Severe torque loss, but will still run at full free speed. 2. Tool will not run.	1. The rotor blades may be damaged. 2. The screws may be loose. 3. The belt may not be seated correctly. 4. The bearings may be damaged.	1. Check and replace with new ones, if necessary. 2. Tighten all loose screws. 3. Adjust it. 4. Replace them.
Note: The consumable parts are the rotor blades and bearings.		

AIR SANDER

Problem (phenomenon)	Possible Cause	Recommended solution
1. The tool runs automatically or tool will not shut off. 2. Torque decreases slightly. 3. Sound of air leaking.	1. Dust jam. 2. Trigger may be damaged!	1. Clean and remove the dust from the air inlet. 2. Clean the throttle valve. 3. Apply a few drops of recommended pneumatic oil into the air inlet. 4. Pull the trigger and run for several seconds to get rid of the dust.
1. Severe torque loss, but will still run at full free speed. 2. Tool will not run.	1. The rotor blades may be damaged, 2. The pad may not be correct. 3. The screws may be loose.	1. Check and replace with new ones, if necessary. 2. Check and replace with the correct one. 3. Tighten all loose screws.

Note: The consumable parts are the rotor blades and bearings.

AIR SHEAR

Problem (phenomenon)	Possible Cause	Recommended solution
1. The tool runs automatically or tool will not shut off. 2. Torque decreases slightly. 3. Sound of air leaking.	1. Dust jam.	1. Clean and remove the dust from the air inlet. 2. Clean the throttle valve. 3. Apply a few drops of recommended pneumatic oil into the air inlet. 4. Pull the trigger and run for several seconds to get rid of the dust.
1. Severe torque loss, but will still run at full free speed, 2. Tool will not run.	1. The rotor blades may be damaged, 2. The cutting blades may not be sharp enough. 3. The cutting blades may not be in the correct position. 4. The lock screws for cutting blades may be loose.	1. Check and replace with new ones, if necessary. 2. Check and replace with new ones, if necessary. 3. Check and adjust them. 4. Check and tighten.

Note: The consumable parts are the rotor blades and bearings.

AIR SAW

Problem (phenomenon)	Possible Cause	Recommended solution
1. The tool runs automatically or tool will not shut off. 2. Torque decreases slightly. 3. Sound of air leaking.	1. Dust jam. 2. Trigger may be damaged!	1. Clean and remove the dust from the air inlet. 2. Clean the throttle valve. 3. Apply a few drops of recommended pneumatic oil into the air inlet. 4. Pull the trigger and run for several seconds to get rid of the dust.
1. Severe torque loss, but will still run at full free speed. 2. Tool will not run.	1. The rotor blades may be damaged.	1. Check and replace with new ones, if necessary.
1. Severe decrease in reciprocating speed.	1. The drive motor may be dirty.	1. Cleaning required.

Note: The consumable parts are the rotor blades and bearings.

Problem (phenomenon)	Possible Cause	Recommended solution
AIR DRILL 1. The tool runs automatically or tool will not shut off. 2. Torque decreases slightly. 3. Sound of air leaking.	1. Dust jam.	1. Clean and remove the dust from the air inlet. 2. Clean the throttle valve. 3. Apply a few drops of recommended pneumatic oil into the air inlet. 4. Pull the trigger and run for several seconds to get rid of the dust.
1. Severe torque loss, but will still run at full free speed. 2. Tool will not run.	1. The rotor blades may be damaged, 2. The keyless chuck may be damaged.	1. Check both possibilities and replace with new ones, if necessary.
Note: The consumable parts are the rotor blades and bearings.		
AIR SCREWDRIVER 1. The tool runs automatically or tool will not shut off. 2. Torque decreases slightly. 3. Sound of air leaking.	1. Dust jam.	1. Clean and remove the dust from the air inlet. 2. Clean the throttle valve. 3. Apply a few drops of recommended pneumatic oil into the air inlet. 4. Pull the trigger and run for several seconds to get rid of the dust.
1. Severe torque loss, but will still run at full free speed, 2. Tool will not run.	1. The rotor blades may be damaged, 2. The screws may be loose. 3. The Reverse Knob may be damaged or not in the right position. 4. The impact mechanism may be damaged.	1. Check both possibilities and replace with new ones, if necessary. 2. Tighten all the loose screws. 3. Check and adjust, or replace with a new one if necessary. 4. Check and replace with a new set, if necessary.
Note: The consumable parts are the rotor blades and bearings.		
AIR HAMMER 1. The tool runs automatically or tool will not shut off. 2. Torque decreases slightly. 3. Sound of air leaking.	1. Dust jam.	1. Clean and remove the dust from the air inlet. 2. Clean the throttle valve. 3. Apply a few drops of recommended pneumatic oil into the air inlet. 4. Pull the trigger and run for several seconds to get rid of the dust.
1. The tool doesn't work	1. The piston may be jammed or damaged. 2. The size of chisel may not be correct.	1. Check and replace the related component when necessary. 2. Check and replace with the correct one.
Note: The consumable parts are the throttle valve and piston.		
HYDRAULIC RIVETER 1. The tool runs automatically or tool will not shut off. 2. Power decreases slightly. 3. Sound of air leaking.	1. Dust jam.	1. Clean and remove the dust from the air inlet. 2. Clean the throttle valve. 3. Apply a few drops of recommended pneumatic oil into the air inlet. 4. Pull the trigger and run for several seconds to get rid of the dust.
1. The tool doesn't work	1. The size of rivet may not be suitable. 2. The size of rivet nose may not be correct.	1. Check and use the correct ones. 2. Check and replace with the correct one!
Note: The consumable parts are the rivet nose, jaw housing, front housing and spring.		

Note:

For more details about the above recommended solutions, please refer to the use'r Manual attached along with each product.

alphabetic index

A

ITEM	Page
AD-3511P / AD-3511T	22
AD-22	203
AD-23	203
AD-24	203
AD-35	204
AD-36	204
AD-309	205
AD-307 / 351 / 361	205
AD-308 / 305-41	205
AD-306	206
AD-201	206
AD-431	206
AJ-1835	238

D

DB-1850P / 1850 / 1825	237
DC-1840	237
DS-10202A	237
DW-1840	237
DJ-1835	238
DFL-101	239
DW-601	239
DW-401	240
DS-201	240
DH-2050	241
DD-2050	241
DRS-101	242
DRS-102	242
DJS-101	242
DG-585	243
DRS-101A(KIT)	243
DRS-102A(KIT)	243
DW-18502A(KIT)	244
DW-601A(KIT)	244
DJS-101A (KIT)	245
DG-585502A(KIT)	245
DW-401A (kIT)	246
DS-201A(KIT)	246
DH-20502A(KIT)	247

J

JC-491	146
JC-202	147
JC-304	147
JC-310	147
JC-313	147
JC-320	147
JC-340	147
JC-405	147
JC-410	147
JC-412	147
JC-424	147
JC-435	147
JC-640	147
JC-641	147
JC-680	147
JC-0424(SET)	147
JC-0415(SET)	147

M

MB64008M1	22
MA4550M50	23
MB34012S	180
MB34013M	180
MB35012S	180
MB35013M	180
MB43015M	180
MB44013S	180
MB44014M	180
MB45010M	181
MB45013S	181
MB64008S	181
MB64008M	181
MB45014M	181
MB64008SP	181
MB65008S	182
MB66006S	182
MB6606M	182
MB65008S1	182
MB65008M	182
MB44008S	182
MB44008M	182
ME011N	183
MA42026	183
MA8050	183
MA42015	183
MA42006M	183
MA42006S	183
MA4030	183
MA4031M85	183
MA211M	185
MA211S	185
MA231M	185
MA231S	186
MA311M	186
MA311S	186
MA331M	187
MA331S	187
MA401M	187
MA401S	187
MA411M	188
MA411S	188
MA431M	189
MA431S	189
MA611S	190
MA611M	191
MA631S	192
MA631M	193
MA811S	194
MA811M	195
MA831S	196
MA831M	197
MA911S	198
MA911M	199
MA931M	200
MA931S	200
ME221	201
ME321	201
ME421	201
ME621	201
ME821	201
ME422	201
ME471S	202
ME471M	202
ME671S	202
ME671M	202
ME903	203
ME904	203
ME906	203
ME908	203
MB371S	203
MA-412M1719	213
MA-412S2426	213
MA-412M2122	213

N

NC-3831	25
NC-3812	25
NC-4811	25
NC-3910	25
NC-3911	25
NC-4255Q	35
NC-4265Q	35
NC-4255QP	35
NC-4255QHP	35
NC-4255QH	35
NC-4255PVC	35
NC-3610Q	36
NC-3210	36
NC-3831	36
NC-398	36
NC-3410	36
NC-3810	36
NC-3910	37
NC-3911	37
NC-3812	37
NC-4233Q	38
NC-4233QH	38
NC-4233TL	38
NC-4236	38
NC-4236Q	38
NC-4610	39
NC-4610Q	39
NC-4256	39
NC-4256Q	39
NC-4256Q-2	39
NC-4258	39
NC-4650	40
NC-4650H	40
NC-498	40
NC-4811	40
NC-4630	40
NC-4630Q	40
NC-4210N	41
NC-4610N	41
NC-4130	42
NC-4232Q	42
NC-4210	42
NC-4230	42
NC-4230Q	42
NC-4240	42
NC-6266H	44
NC-6256Q	44
NC-6201	44
NC-4255PVC	45
NC-6266	45
NC-6266-6	45
NC-6255Q	45
NC-6255QH	45
NC-6113	46
NC-6123	46
NC-6210	46
NC-6210Q	46
NC-6220	46
NC-6236	46
NC-6236Q	46
NC-6216	46
NC-6226	46
NC-6213	46
NC-6218	47
NC-6215	47
NC-6225	47
NC-6217	47
NC-8212	48
NC-8217	48
NC-8219	48
NC-8237	49
NC-8237-6	49
NC-8266P	49
NC-8266P-6	49
NC-8343	50
NC-8343-8	50
NC-8211	50
NC-8221	50
NC-8232	50
NC-8311	50
NC-8351	50
NC-8266S-6	51
NC-8266S	51
NC-8266S-8	51
NC-8216	51
NC-8226	51
NC-8266Q	51
NC-8332	52
NC-8332-6	52
NC-8382	52
NC-8382-8	52
NC-8242	52
NC-8242-8	52

alphabetic index

NC-8252 52
NC-8262 52
NC-8322 / NC-8342 53
NC-8362 / NC-8372 53
NC-9223 / NC-9243 53
NC-4232Q(KIT) 54
NC-4233Q(KIT) 54
NC-4255Q(KIT) 54
NC-4650(KIT) 55
NC-6236(KIT) 55
NC-6255Q 55
NC-0410(KIT) 56
NC-0415(KIT) 56
NC-0615(KIT) 57
NC-4255Q-41(KIT) 57
NC-4255Q-41 KITA05 57
NE-383 61
NE-483 61
NE-4815 61
NE-3305 61
NE-4305 61
NE-3901 62
NE-4901 62
NE-3920 62
NE-462 62
NE-462T 62
NE-251R / 351R / 451R 63
NE-251 / 351 / 451 63
NE-352 63
NE-261 63
NE-362 63
NE-361 63
NE-332 64
NE-488 64
NE-432 64
NE-321 64
NE-421 64
NE-343 64
NE-443 64
NE-399 65
NE-499 65
NE-499N 65
NE-0413(KIT) 65
NE-0413S(KIT) 65
NE-0405(KIT) 66
NC-0208(SET) 149
NC-2210N(SET) 150
NC-4255PVC 213

P

PB-2601 17
PN-150 107
PN-180 107
PN-250 107
PN-280 107
PC-2010 116
PC-901 116
PA-111 136
PA-201 136
PA-211 136
PA-301 136
PA-321 136
PA-201V 136
PA-MC 136
PE-MC 136
PA-301V 137
PA-401V 137
PA-202V 137
PA-312V 137
PA-203N 137
PA-2601 138
PA-211TS 138
PB-2402 138
PB-1305 138
PB-1308 138
PB-1310 138
PB-1312 138
PA-9048 140
PA-9064 140
PA-9006 140
PB-9010 140
PA-9048 216
PB-9006 216
PA-9064 216
PB-9010 216

Q

QA-1211 / QA-1221 13
QA-2211 / QA-2221 13
QA-6201 13
QA-6205 14
QB-192L / QB-192 14
QB-193L / QB-193 14
QB-20203 15
QB-7315 15
QC-333 15
QD-501 16
QD-260 16
QE-3031 16
QK-131 17
QK-112 / QK-112N 18
QC-512 19
QA-1710 A / B 26
QA-141 / QA-141L 26
QA-131 27
QA-143 27
QA-151 27
QA-163 / QA-163L 27
QB-197Q 28
QB-194 28
QB-194L 28
QB-194-CN 28
QB-195-85 28
QB-195-120 28
QB-195L-85 29
QB-195L-120 29
QB-199 S/M 29
QB-1004 30
QB-2925 / QB-2925L 30
QA-633Q A/B 69
QA-131 69
QA-681 69
QA-143 70
QA-151 70
QA-163 / QA-163L 70
QA-1710 A/B 71
QA-632Q A/B 71
QA-611 A/ B 71
QA-110 A/ B 72
QA-101 A/ B 72
QA-111 A/ B 72
QA-210 A/ B 72
QA-211 A/ B 72
QA-231Q A/ B 72
QA-241 A/ B 72
QA-311 A/ B 73
QA-313 A/ B 73
QA-315 A/ B 73
QA-116 A/ B 73
QA-0115 A/ B 74
QA-0215 A/ B 74
QA-0615 A/ B 74
QA-0207 A/ B 74
QA-4507 75
QA-412 75
QA-421 75
QA-431 75
QA-432 75
QA-511 75
QA-441 75
QB-7315 M/S 77
QB-7114 78
QB-7145 78
QB-7115 M/S 78
QB-194 / QB-194L 79
QB-192 / QB-192L 79
QB-193 / QB-193L 79
QB-104 / QB-105 80
QB-114 / QB-115 80
QB-124 / QB-125 80
QB-134 / QB-135 80
QB-154 / QB-155 80
QB-144 / QB-145 80
QB-164 / QB-165 80
QB-107 80
QB-117 / QB-177 81
QB-197Q 82
QB-179 82
QB-185 82
QB-187 82
QB-194-CN 83
QB-195-85 83
QB-195-120 83
QB-195L-85 84
QB-195L-120 84
QB-195-CN 84
QB-199 84
QB-1004 84
QB-2925 85
QB-2925L 85
QB-623 85
QB-311 86
QB-312 86
QB-313 86
QB-321 86
QB-324 86
QB-322 / QB-322C 87
QB-322RC 87
QB-325N SET 87
QB-51612 89
QB-51602 89
QB-20203 89
QB-42 90
QB-46 90
QB-49602 90
QB-52 90
QB-55 90
QB-58502 91
QB-58602 91
QB-9302 / QB-9303 91
QB-9305 / QB-9306 91
QB-9345 / QB-9307 91
QB-43 92
QB-47 92
QB-53 92
QB-56602 92
QB-59602 93
QB-9315 93
QB-9327 93
QB-9366 93
QB-41 94
QB-45 94
QB-54 94
QB-57602 95
QB-48012 96
QB-48111 96
QB-48112 96
QB-48212 97
QB-48211 97
QB-57642 98
QB-59642 98
QB-58542 99
QB-58642 99
QP-113 100
QP-123 100
QP-123QP 100
QP-215 100
QP-317 100
QP-307 / QP-327 100
QP-335 100
QD-242 102
QD-230 102

alphabetic index

QD-221 102
QD-260 103
QD-501 103
QC-213 / QC-213T 104
QC-234 / QC-234T 104
QC-253 105
QC-254 105
QC-264 105
QC-512 105
QK-131 106
QK-111 106
QK-121 106
QK-111T 107
QK-112 / QK-112N 107
QD-321 108
QD-291N 108
QG-102 109
QG-202 109
QG-103 109
QE-3031 111
QE-831 111
QE-331 / QE-332 112
QE-333 / QE-334 112
QE-431 / QE-432 112
QE-433 / QE-434 112
QE-532 112
QE-533 112
QE-833 112
QE-633 113
QE-933 113
QE-935 113
QE-936 113
QE-341 / QE-342 114
QE-343 / QE-344 114
QE-441 / QE-442 114
QE-443 114
QE-542 114
QE-543 114
QE-841 115
QE-843 115
QE-845 115
QE-231 116
QB-0618(SET) 149
QA-651N(SET) 150
QP-212N(SET) 151
QP-213N(SET) 151
QP-223N(SET) 152
QE-323N(SET) 152
QM-1125 153
QT-102 153
QT-203 / QT-113 153
QB-0808 154
QB-0808U 154
QB-812 / QB-812U 154
QB-802 / QB-802U 154
QT-203T / QT-303 156
QT-112T 157
QB-812T 157
QB-812TU 157
QB-802T 157
QB-802TU 157
QP-415 157
QB-922 / QB-923 208
QB-9337M 209
QB-9337S 209
QB-95 210
QB-94 210
QB-9712K 210
QB-9713K 210
QB-9434 / QB-9434U 210
QB-9444 / QB-9444U 210
QB-9211A / B 211
QB-9213A/ B 211
QB-911 / QB-912 211
QB-904 / 905 / 907 211
QB-913 / QB-914 211
QD-932P 212
QD-924P 212
QD-905P 212
QD-906P 212
QM-901 212
QD-901 212
QK-SERIES 214
QB-9303K04 217
QB-974K12 217
QB-9773K19 217
QB-9752K07 217
QB-9762K07 217
QB-9742K20 217
QB-9742K12 217
QB-9743K20 217

R

RA-1131 31
RA-1141 31
RA-1151 31
RA-2161 31
RA-31 / 41 / 51 SERIES 33
RA-30 / 40 / 50 SERIES 33
RA-111 37
RA-1131 120
RA-1141 120
RA-2161 120
RA-1151 120
RA-801EA 120
RA-101 / RA-101C 121
RA-102 121
RA-105 121
RA-110 121
RA-1232 121
RA-1242 122
RA-1272 122
RA-201 122
RA-606 122
RA-608 122
RA-2242 123
RA-2272 123
RA-1132 123
RA-1142 123
RA-1162 123
RA-301 124
RA-302 124
RA-801 124
RA-802 124
RA-402 124
RA-811 124
RA-505N(SET) 153

S

SM-111R 17
SX-4101 19
SB-710 19
SP-3900 20
SP-31050 20
SP-31200 20
SR-2001-KIT 21
SZ-212A 21
SE-2011 22
SG-405 23
SG-407 23
SG-902 23
ST-14B7-T 23
SP-3400 / SP-3500 127
SP-3600 127
SP-3700 127
SP-3900 127
SP-31050 127
SP-31200 127
SP-101 / SP-102 128
SP-103 / SP-104 128
SP-105 / SP-111 128
SP-112 / SP-113 128
SP-212 / SP-213 128
SP-3050 / SP-3070 128
SP-3090 / SP-3150 128
SP-3220 / SP-3300 128
SC-331C / SC-341C 130
SC-332C / SC-342C 130
SC-211C / SC-221C 130
SC-212C / SC-222C 130
SN-1032 130
SC-05C / 06C (SET) 131
SC-33C / 34C 131
SN-9101 / SN-9103 131
SN-9201 / SN-9203 131
SN-3111C / 3112C 132
SN-3113C / 3114C 132
SN-3121C / 3122C 132
SN-3123C / 3124C 132
SN-3212C / 3213C 132
SN-3214C 132
SN-3222C / 3223C 132
SN-3224C 132
SN-1268 132
SN-1288 132
SN-1368 132
SN-2124 133
SN-2128 133
SN-2110 133
SJ-FN90E 133
SJ-1650T 142
SJ-1830F 142
SJ-C1830F 142
SU-C422J 142
SU-C1022J 142
SJ-TN64 142
SJ-BNF1664 142
SU-9025 142
SJ-1850F 142
SU-8016 142
SU-9040 142
SU-H3518S 143
SU-H3522S 143
SU-H3218S 143
SU-H3222S 143
SU-A3518S 143
SU-A3522S 143
SU-A3218S 143
SU-A3222S 143
SJ-CN55 144
SJ-CN70 144
SJ-CN57 144
SJ-CN65 144
SG-400 / SG-500 146
SG-401 / SG-501 146
SG-400C 146
SG-405 SG-407 146
SG-902 146
SK-1131 154
SK-1010 154
SM-111R 154
SB-6042 155
SB-3038 155
SB-3030 155
SB-4031 SB/4151 155
SB-2031 / SB-2131 155
SB-422 155
SB-423 155
SB-201 155
SB-215 155
SB-710 155
SE-2011 156
SE-501 156
SE-1011 156
SE-1025 156
SR-2001(KIT) 158
SC-005 158
SR-2101 158
SM-0813 159
SM-0911 159
SM-0503 159
SQ-0217 159
SX-3101 160
SX-3102 160
SX-3103 160
SX-3111 160
SX-1615 160

alphabetic index

SX-3112..... 160
SX-2101..... 161
SX-3301..... 161
SX-3203..... 161
SX-4101..... 161
SV-1240..... 163
SV-2230 / SV-2330 163
SV-2220..... 163
SV-2431..... 164
SV-1260 / SV-1360 164
SV-2260 / 2280..... 165
SV-2360 / 2380..... 165
SV-3260 / 3360..... 165
SV-3460..... 166
SV-1460..... 167
SV-2460..... 167
SV-1660..... 168
SV-1860..... 168
SV-3660 / 3860..... 168
SV-2660 / 2860..... 168
SA-2015..... 170
SA-3215 / SA-3315 170
SA-4320..... 170
SA-4420..... 170
SD-23 / SD-24..... 171
SD-22..... 171
ST-14B7-T..... 172
ST-10C521..... 173
ST-10C522S..... 173
SF-306..... 206
SF-604..... 206
SF-605..... 206
SH-1001..... 206
SN-9101 / SN-9103 213
SN-9201 / SN-9203 213
SW-12 / SW-13..... 213
SC-415P..... 214
SC-425P..... 214
SN-124 215
SN-128..... 215
SN-268..... 215
SN-288..... 215
SB-902..... 215
SC-2B..... 215
SC-2A..... 215
SG-101..... 215
SO-10..... 215
SO-10T..... 215
SZ-212A..... 219
SY-2001M..... 220
SY-2002M..... 220

T

TE-81N..... 20
TE-82N..... 20
TE-83N..... 20
TE-84N..... 20
TE-85N..... 20
TM-0416..... 21
TM-0418..... 21
TM-0428-1..... 21
TM-0428-2..... 21
TW-402102N..... 174
TW-404202N..... 174
TW-406302N..... 174
TW-408402N..... 174
TW-611552N..... 174
TW-615752N..... 174
TW-210222..... 174
TW-310552..... 174
TW-411102..... 174
TW-412202..... 174
TE-205025N..... 174
TE-225250N..... 174
TE-305025N..... 174
TE-320110N..... 174
TE-325250N..... 174
TE-428210N..... 174
TE-450350N..... 174
TB-205025N..... 174
TB-305025N..... 174
TB-320110N..... 174
TB-420210N..... 174
TB-450350N..... 174
TB-610060N..... 174
TB-615080N..... 174
TB-620100N..... 174
TD-205025..... 174
TD-305050..... 174
TD-410100..... 174
TD-420200..... 174
TD-610060..... 174
TW-611602..... 175
TW-611802..... 175
TW-612102..... 175
TF-310080N..... 176
TF-430250N..... 176
TS-320100N..... 177
TS-440250N..... 177

W

WG-202..... 158
WG-202N..... 158

Z

ZT-31..... 125
ZT-13-1 / ZT-13-2 207
ZC-201 / ZC-501 224
ZB-812 / ZB-814 224
ZC-202-1..... 224
ZC-203..... 224
ZB-306 / ZB-307 224
ZB-604..... 224
ZC-111 / ZC-112.... 225
ZF-01 / ZF-02..... 225
ZG-101..... 225
ZH-104..... 225
ZE-03..... 225
ZC-301..... 225
ZC-302..... 225
ZC-303..... 225
ZC-304..... 225
ZC-107..... 225

DB-1850P 18V 5.0Ah Li-ion Battery
DB-1850 18V 5.0Ah Li-ion Battery
DB-1825 18V 2.5Ah Li-ion Battery

DB-1850P

DB-1850

DB-1825

DC-18A

Cordless 18V Battery Charger

18V Li-ion Battery Charger
(For DB-1825/DB-1850/DB-1850P)

DS-10202A

CORDLESS IMPACT DRIVER

5 pieces in one carton

+ Max. torque 100 NM
+ Quick charge-up in 30 minutes
+ Battery x 2pcs included for a longer period of usage
+ LED lamp to light up the working area
+ Battery applicable to all m7 12V cordless models.

DW-1840

CORDLESS IMPACT WRENCH

5 pieces in one carton

FEATURES

- Max. torque: 1220 Nm / 900 FT-LB
- LED lamp to light up the working area

	Chuck size	Max. drill capacity	Bolt capacity	Battery	Max. torque	No load speed	Impact rate	Torque setting	Weight
	inch / mm	mm(steel / wood)	----	Li-ion Ah	Nm	rpm	bpm	-----	kg
DW1840	1/2" / 12.7	----	M6 ~ M24	5.0	1220	0~1900	0~2200	------	3.2
DS10202	1/4" / 6.35	----	M4 ~ M12	2.0	100	0~2200	0~3000	------	1.0

DJ-1835

CORDLESS NAILER GUN

2 pieces in one carton

+ housing : Nylon/Glass Fiber w/soft grip
+ Trigger Switch : Two-finger w/soft padding
+ Rated Voltage : 110-120V / 220-240V
+ DC:18V 2.0Ah Li-ion
+ Max Firing speed :30 shots/min

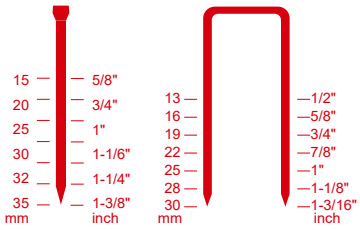

AJ-1835

ELECTRIC NAILER GUN

2 pieces in one carton

+ housing : Nylon/Glass Fiber w/soft grip
+ Trigger Switch : Two-finger w/soft padding
+ Rated Voltage : 220v-240v
+ Max Firing speed :30 shots/min

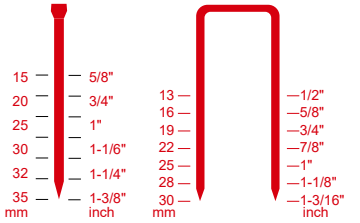

	Nail Type	Crown	Shank Thickness / width	Length	Gauge	Dimensions	Load Capacity	Weight
		mm	mm	mm		(mm)(HxWxL)	(pcs)	(kg)
AJ-1835	Brad	----	1.0/1.25	15~35	18	231 x 68 x 272	100	1.9
	Staple	5.8	1.0/1.25	13~30	18			
DJ-1835	Brad	----	1.0/1.25	15~35	18	265 x 82 x 245	100	3.3
	Staple	5.8	1.0/1.25	13~30	18			

DFL-101

CORDLESS LED FLOOD LIGHT

4 pieces in one carton

Key Spec:
+ Bulb Type : LED
+ Lumens : 180° 450 LM / 360° - Low 550 LM / 360° - High 850 LM
+ Runtime : 180° 18 Hrs / 360° - Low 20 Hrs / 360° - High 10 Hrs

FEATURES

- 3-stage brightness adjustment for different environmental needs
- Use M7 general battery system
- DFL-101 can provide long-term lighting needs

	Bulb Type	Lumens			Runtimes		
DFL-101	LED	180° 450 LM	360° - Low 550 LM	360° - High 850 LM	18 Hrs (180°)	20 Hrs (360° - Low)	10 Hrs (360° - High)

BRUSHLESS Motor

DW-601

CORDLESS IMPACT WRENCH

1900 Nm

Patented
Shock Absorption Body

FEATURES

- 3-speed power selection switch provides precise fastening control.
- The BL Brushless Motor eliminates carbon brushes, enabling the BL Motor to run cooler and more efficiently for longer life.
- Efficient BL Brushless motor is electronically controlled to optimize battery energy use for up to 50% longer run time per charge.

	Square Drive	Bolt Capacity	Max Torque		No Load Speed	Impact Rate	Net Weight	
	Inch(mm)		FT-LB	Nm	R.P.M	I.P.M	LBS	kg
DW-601	3/4"(19)	M10-M27	1400	1900	0-900 / 0-1000 / 0-1800	0-1800 / 0-2000 / 0-2200	7.4	3.37

BRUSHLESS Motor

DW-401

CORDLESS IMPACT WRENCH

4 pieces in one carton

FEATURES

- 3 speeds with torque selection allow user to better apply the tool to the application
- Auto-stop function automatically shuts the tool down,reducing the likelihood of overdriving and damaging materials
- Impact rate:0-1,500 / 0-2,500 / 0-3,000 IPM and up to 600ft-lb of torque

	Square Drive	Bolt Capacity	Max Torque		No Load Speed	Impact Rate	Net Weight	
	Inch(mm)		FT-LB	Nm	R.P.M	I.P.M	LBS	kg
						ipm	lb	kg
DW-401	1/2"(12.7)	M16	600	813	0-1100 / 0-1600 / 0-2200	0-1500 / 0-2500 / 0-3000	3.3	1.48

BRUSHLESS Motor

DS-201

CORDLESS IMPACT DRIVER

4 pieces in one carton

FEATURES

- 3 speeds with torque selection allow user to better apply the tool to the application
- Auto-stop function automatically shuts the tool down, reducing the likelihood of overdriving and damaging materials
- Impact rate : 0-1,200 / 0-2,350 / 0-3,300 IPM and up to 150 ft-lb of torque

	Chuck Size	Bolt Capacity	Max Torque	No Load Speed	Impact Rate	Net Weight	
	mm		FT-LB(Nm)	R.P.M	I.P.M	LBS	kg
					ipm	lb	kg
DS-201	1/4"(6.35)	M12	150(203)	0-1100 / 0-1900 / 0-2800	0-1200 / 0-2350 / 0-3300	2.8	1.28

BRUSHLESS *Motor*

DH-2050

CORDLESS HAMMER DRILL DRIVER

3 pieces in one carton

FEATURES

- Brushless motor technology delivers longer motor life, more power and more run-time.
- Jacobs® 1/2" Racheting , single-sleeve keyless metal chuck.
- Two speed metal gearbox operates at 0-450/0-1750 RPM.
- 24-Position adjustable torque clutch including drilling.
- LED work light on the foot with after-glow.
- Electric brake quickly stops the chuck rotation.
- Removable bit holder and belt clip.

	Chuck Size	Max Torque	Free Speed	Impact Rate	Net Weight		Torque Setting	Max Drill Capacity	
	mm	N.m	R.P.M	I.P.M	LBS	kg		Wood	Steel
				ipm	lb	kg			
DH-2050	13	79.1	Low 0-450 / High 0-1750	0-6500 / 0-24000	2.95	1.34	23+1	60	13

BRUSHLESS *Motor*

DD-2050

CORDLESS DRILL DRIVER

4 pieces in one carton

FEATURES

- Brushless motor technology delivers longer motor life, more power and more run-time.
- Jacobs® 1/2" Racheting , single-sleeve keyless metal chuck.
- Two speed metal gearbox operates at 0-450/0-1750 RPM.
- LED work light on the foot with after-glow.
- Electric brake quickly stops the chuck rotation.
- Removable bit holder and belt clip.

	Chuck Size	Max Torque	Free Speed	Impact Rate	Net Weight		Torque Setting	Max Drill Capacity	
	mm	N.m	R.P.M	I.P.M	LBS	kg		Wood	Steel
				ipm	lb	kg			
DD-2050	13	67.8	Low 0-450 / High 0-1750	---------	2.79	1.27	23+1	60	13

DRS-101

CORDLESS RECIPROCATING SAW

3 pieces in one carton

FEATURES

- Blad stroke : 1-1/8"(29mm)
- LED work light with pre-light and afterglow
- Electric brake quickly stops the blade rotation when the trigger is released
- Bevel Gear Drive System
- Tool-less Blade Change

DRS-102

CORDLESS RECIPROCATING SAW

3 pieces in one carton

FEATURES

- Tool-less shoe adjustment.
- LED work light with pre-light and afterglow.
- Blade can immediately stop operating when the trigger is loosened.
- Safety Lock button.

	Stroke Length	Stroke Per min.	Overall Length	Net Weight		Cut Capacity	
	mm	S.P.M	Inch (mm)	LBS	kg	mm	
		S.P.M	L	lb	kg	Wood	Steel
DRS-101	29	3100	16-1/7 (410)	5.95	2.7	200	20
DRS-102	25	3100	13-3/13 (410)	3.92	1.78	160	16

DJS-101

CORDLESS JIG SAW

3 pieces in one carton

U-SHANK JIGSAW Blade

T-SHANK JIGSAW Blade

SUITABLE FOR BOTH T & U SHANK

FEATURES

- Variable speed trigger for precision speed and control.
- Electric brake quickly stops the blade motion.
- 4-Position orbital action for cutting versatility in a variety of materials.
- Adjustable shoe bevels from 0 - 45 degrees (left/right).
- Tool-less blade change allows for fast blade changes; accepts "T" and "U" shank Jigsaw blades.
- LED work light.

CUTTING CAPACITY
2-1/2"(Wood) ; 3/8" (Aluminum) ; 1/4" (Steel)

SPEC
VARIABLE SPEEDS 0-2,200 SPM(No-load) STROKE LENGTH 1"

	Stroke Length	Stroke Per min.	Overall Length	Net Weight		Cut Capacity		
	mm	S.P.M	Inch (mm)	LBS	kg	mm		
		S.P.M	L	lb	kg	Wood	Aluminium	Steel
DJS-101	25.4	2200	16-1/7 (410)	5.9	2.7	2-1/2"(63)	3/8"(9.53)	1/4"(6.0)

DG-585

CORDLESS ANGLE GRINDER

10 pieces in one carton

FEATURES

- Tool-less adjustable guard for quick and easy adjustments.
- Spindle lock for quick and easy disc changes.
- 2-Position handle.
- Lock-on switch for continuous operation.

	Stroke Size	Pad Dia	Free Speed	Overall Length	Net Weight	
		Inch (mm)	R.P.M	Inch (mm)	LBS	kg
DG-585	M14*P2.0	5"(125)	8000	11-7/32"(285)	4.8	2.2

DRS-101A [KIT]

CORDLESS RECIPROCATING SAW

3 pieces in one carton

Key Spec:

+ Stroke Length : 29mm (1-1/7")
+ Stroke Per min. : 3100 s.p.m
+ Net Weight : 5.95 lbs (2.7 kg)
+ Cut Capacity : Wood-200 mm / Metal-20 mm
+ Accessories : 5.0Ah battery x 2pcs; charger x 1pc Packaging: Color Box

DRS-102A [KIT]

CORDLESS RECIPROCATING SAW

3 pieces in one carton

Key Spec:

+ Stroke Length : 25mm (1")
+ Stroke Per min. : 3100 s.p.m
+ Net Weight : 3.92 lbs (1.78 kg)
+ Cut Capacity : Wood-160 mm / Metal-16 mm
+ Accessories : 5.0Ah battery x 2pcs; charger x 1pc
+ Packaging: BMC

	Stroke Length	Stroke Per min.	Overall Length	Net Weight		Cut Capacity	
	mm	S.P.M	Inch (mm)	LBS	kg	mm	
		S.P.M	L	lb	kg	Wood	Steel
DRS-101	29	3100	16-1/7 (410)	5.95	2.7	200	20
DRS-102	25	3100	13-3/13 (410)	3.92	1.78	160	16

DW-18502A [KIT]

CORDLESS IMPACT WRENCH

3 pieces in one carton

Key Spec:

+ Max. torque 1220 NM / 900 FT-LB
+ Quick charge-up in 60 minutes
+ 5.0 Ah battery x 2 pcs included for a longer period of usage.
+ LED lamp to light up the working area
+ Battery level LED indicator
+ Brake stop function not to damage the screwed object

CONTENTS

- 2pcs 18V 5.0 Ah Lithium-ion
- 1pc Lithium-ion Battery Charger

	Square Drive	Max. drill capacity	Bolt capacity	Battery	Max. torque	No load speed	Impact rate	Torque setting	Weight
	inch / mm	mm(steel / wood)	----	Li-ion Ah	Nm	rpm	bpm	-----	kg
DW-1840	1/2" / 12.7	----	M6 ~ M24	5.0	1220	0~1900	0~2200	------	3.2

BRUSHLESS *Motor*

DW-601A [KIT]

CORDLESS IMPACT WRENCH

2 pieces in one carton

Patented
Shock Absorption Body

1900 Nm

Key Spec:

+ Max. torque : 1900 NM / 1400 FT-LB
+ Speed : 0-900 RPM / 0-1000 RPM / 0-1800 RPM
+ Square Drive : 3/4"
+ Accessory : 2pcs 5.0Ah Li-ion battery+ 1pc charger
+ Package : BMC
+ Battery level LED indicator
+ LED lamp to light up the working area

	Square Drive	Bolt Capacity	Max Torque		No Load Speed	Impact Rate	Net Weight	
	Inch(mm)		FT-LB	Nm	R.P.M	I.P.M	LBS	kg
					No	ipm	lb	kg
DW-601	3/4"(19)	M10-M27	1400	1900	0-900 / 0-1000 / 0-1800	0-1800 / 0-2000 / 0-2200	7.4	3.37

DJS-101A [KIT]

CORDLESS JIG SAW

3 pieces in one carton

Key Spec:
+ Stroke Length: 25mm (1")
+ No Load Speed: 0-2200
+ Variable Speed
+ Keyless Accessory Change
+ LED Light
+ Accessories: 5.0Ah battery x 2pcs; charger x 1pc
+ Packaging: Color Box

SPEC
VARIABLE SPEEDS 0-2,200 SPM(No-load)
STROKE LENGTH 1"

CUTTING CAPACITY:
2-1/2"(Wood);3/8" (Aluminum);1/4" (Steel)

SUITABLE FOR BOTH T & U SHANK

	Stroke Length	Stroke Per min.	Overall Length	Net Weight		Cut Capacity		
	mm	S.P.M	Inch (mm)	LBS	kg	mm		
		S.P.M	L	lb	kg	Wood	Aluminium	Steel
DJS-101	25.4	2200	16-1/7 (410)	5.9	2.7	2-1/2"(63)	3/8"(9.53)	1/4"(6.0)

DG-585502A [KIT]

CORDLESS ANGLE GRINDER

2 pieces in one carton

Key Spec:
+ Power: 18V
+ No Load Speed: 8000RPM
+ Cutting Disk: 125mm (NOT INCLUDED)
+ Spindle thread: M14 x P2.0

Accessories:
5.0Ah battery x 2pcs
Charger x 1pc
Guard spanner x 1pc
Aux handle x 1pc
Packaging: color boxcharger x 1pc
Packaging: BMC

FEATURES

- Tool-less adjustable guard for quick and easy adjustments.
- Spindle lock for quick and easy disc changes.
- 2-Position handle.
- Lock-on switch for continuous operation.

	Stroke Size	Pad Dia	Free Speed	Overall Length	Net Weight	
		Inch (mm)	R.P.M	Inch (mm)	LBS	kg
			No	L	lb	kg
DG-585	M14*P2.0	5"(125)	8000	11-7/32"(285)	4.8	2.2

BRUSHLESS Motor

DW-401A [KIT]

CORDLESS IMPACT WRENCH

3 pieces in one carton

Key Spec:
+ Max. torque : 813 NM / 600 FT-LB
+ Speed : 0-1100 RPM / 0-1600 RPM / 0-2200 RPM
+ Square Drive : 1/2"
+ Accessory : 2pcs 5.0Ah Li-ion battery+ 1pc charger
+ Package : BMC
+ Battery level LED indicator
+ LED lamp to light up the working area

FEATURES

- 3 speeds with torque selection allow user to better apply the tool to the application
- Auto-stop function automatically shuts the tool down,reducing the likelihood of overdriving and damaging materials
- Impact rate:0-1,500 / 0-2,500 / 0-3,000 IPM and up to 600ft-lb of torque

	Square Drive	Bolt Capacity	Max Torque		No Load Speed	Impact Rate	Net Weight	
	Inch(mm)		FT-LB	Nm	R.P.M	I.P.M	LBS	kg
						ipm	lb	kg
DW-401	1/2"(12.7)	M16	600	813	0-1100 / 0-1600 / 0-2200	0-1500 / 0-2500 / 0-3000	3.3	1.48

BRUSHLESS Motor

DS-201A [KIT]

CORDLESS IMPACT DRIVER

3 pieces in one carton

Key Spec:
+ Chuck Size : 6 mm (16/64")
+ Bolt Capacity : M12
+ Max. torque : 203 NM / 150 FT-LB
+ Speed: 0-1100 RPM / 0-1900 RPM / 0-2800 RPM
+ Impact Rate : 0-1200 I.P.M / 0-2350 I.P.M / 0-3300 I.P.M
+ Accessory : 2pcs 5.0Ah Li-ion battery+ 1pc charger
+ Package : BMC
+ Battery level LED indicator
+ LARGE RING LED lamp to light up the working area

FEATURES

- 3 speeds with torque selection allow user to better apply the tool to the application
- Auto-stop function automatically shuts the tool down, reducing the likelihood of overdriving and damaging materials
- Impact rate : 0-1,200 / 0-2,350 / 0-3,300 IPM and up to 150 ft-lb of torque

	Chuck Size	Bolt Capacity	Max Torque	No Load Speed	Impact Rate	Net Weight	
	mm		FT-LB(Nm)	R.P.M	I.P.M	LBS	kg
					ipm	lb	kg
DS-201	1/4"(6.35)	M12	150(203)	0-1100 / 0-1900 / 0-2800	0-1200 / 0-2350 / 0-3300	2.8	1.28

BRUSHLESS Motor

DH-20502A [KIT]

CORDLESS HAMMER DRILL DRIVER

2 pieces in one carton

Key Spec:
+ Speed : 0-450 RPM/0-1750 RPM
+ Impact Rate : 0-6500 I.P.M / 0-24000 I.P.M
+ Setting : 23+1
+ Max Torque : 79.1N.m
+ Chuck Size : 13 mm (1/2")
+ Max Drill Capacity : Wood-60 mm / Steel-13 mm
+ Accessory : 2pcs 5.0Ah Li-ion battery+ 1pc charger
+2pcs bits
+ Package : BMC

FEATURES

- Brushless motor technology delivers longer motor life, more power and more run-time.
- Jacobs® 1/2" Racheting , single-sleeve keyless metal chuck.
- Two speed metal gearbox operates at 0-450/0-1750 RPM.
- 24-Position adjustable torque clutch including drilling.
- LED work light on the foot with after-glow.
- Electric brake quickly stops the chuck rotation.
- Removable bit holder and belt clip.

	Chuck Size	Max Torque	Free Speed	Impact Rate	Net Weight		Torque Setting	Max Drill Capacity	
	mm	N.m	R.P.M	I.P.M	LBS	kg		Wood	Steel
				ipm	lb	kg			
DH-2050	13	79.1	Low 0-450 / High 0-1750	0-6500 / 0-24000	2.95	1.34	23+1	60	13

BRUSHLESS Motor

DD-20502A [KIT]

CORDIESS DRILL DRIVER

2 pieces in one carton

Key Spec:
+ Speed: 0-450RPM/0-1750RPM
+ Setting: 23+1
+ Max Torque: 68N.m
+ Chuck Size: 1/2"
+ Accessory: 2pcs 5.0Ah Li-ion +battery+ 1pc charger
+2pcs bits
+ Package: BMC

FEATURES

- Brushless motor technology delivers longer motor life, more power and more run-time.
- Jacobs® 1/2" Racheting , single-sleeve keyless metal chuck.
- Two speed metal gearbox operates at 0-450/0-1750 RPM.
- LED work light on the foot with after-glow.
- Electric brake quickly stops the chuck rotation.
- Removable bit holder and belt clip.

	Chuck Size	Max Torque	Free Speed	Impact Rate	Net Weight		Torque Setting	Max Drill Capacity	
	mm	N.m	R.P.M	I.P.M	LBS	kg		Wood	Steel
				ipm	lb	kg			
DD-2050	13	67.8	Low 0-450 / High 0-1750	---------	2.79	1.27	23+1	60	13

CORDLESS TOOLS

M7 Cordless 18V Battery Li-ion 5.0 Ah